Mendocino City Community Services District
10500 Kelly Street ▪ PO Box 1029 ▪ Mendocino, CA 95460
Phone: 707.937-5790 Fax: 707.937.3837 http://www.mccsd.org

Recycled Water Expansion Project

Addendum No. 2

November 18, 2026

The following is Addendum No. 2 to the Mendocino City Community Services District – Recycled Water Expansion Project.

IF YOU SUBMIT A PROPOSAL, ACKNOWLEDGMENT OF THIS ADDENDUM MUST BE SHOWN ON THE BID PROPOSAL FORM, OR IT MAY BE DEEMED AS NON-RESPONSIVE.

This Addendum is hereby made part of the Contract Documents to the same extent that it were originally included therein.

Questions and Answers (listed in order received):

Question 1: Please clarify the NEMA rating of the two meter pedestals. NEMA 3 R or NEMA 4X.

Response 1: The NEMA rating shall be 3R minimum, listed and labeled for outdoor/wet-location installation, with meter socket configuration and service rating acceptable to PG&E.

Question 2: On sheet C-402 the plans show a 13x24 pull box in Little Lake St with no other information regarding the box. Typically PG&E will require a specific type of box. Please provide a PG&E code for this box.

Response 2: Provide a PG&E-approved 8,000-lb polymer-concrete cover, installed in accordance with PG&E Standard 028028.

Question 3: Where does the irrigation controller at MCCSD get 120 volt power from?

Response 3: Power is provided by the new PG&E service, which is shown on Drawing C-101.

Question 4: There is no irrigation controller shown at Hillcrest is that correct?

Response 4: Correct.

Question 5: Where does the irrigation controller at Heider get 120 volt power from?

Response 5: Power is provided by the new PG&E service, which is shown on Drawing C-402.

Question 6: There is no irrigation controller shown at Evergreen. Is that correct?

Response 6: Correct.

Question 7: Will a square/rectangular top with the hatch cast into it be acceptable for the Wet Well? Precasters can not quote this as circular due to size limitations on their circular forms.

Response 7: Provide a circular reinforced concrete top with the access hatch cast in. A detail for a cast-in-place construction is added to Drawing C-502.

Question 8: No listed work hours in the spec. Please confirm same as last project (i.e. 7A-3:30pm).

Response 8: Regular working hours are stated in Section 7.03.E.1 of the Standard General Conditions. They are 7 am – 5 pm.

Question 9: No listed traffic control times in the spec. Please confirm same as last project or provide revised times.

Response 9: Traffic control times shall correspond with regular working hours, unless approved otherwise by the Mendocino County Department of Transportation.

Question 10: Please provide cost for MCCSD Sewer Discharge permit, if needed, to discharge ground water and hydrostatic testing water into the sewer.

Response 10: MCCSD will issue a no-cost sewer discharge permit, if needed, to discharge ground water and hydrostatic testing water into the sewer.

Question 11: Specs list “Earthwork” as being limited to May 15-Oct15 (spec page 31 25 00 – 2). Please confirm this project is not limited to these work dates as this isn’t a true ‘earthwork’ project, but a ‘trenching excavation’ project.

Response 11: The work is not limited to the dates of May 15 to October 15. Perform work between October 15 and May 15 under an approved Water Pollution Control Plan.

Question 12: Please confirm when this project will award and when expected start date is.

Response 12: A Notice of Award is expected to be issued by December 4, 2026. The estimated Notice to Proceed date is after December 14, 2026, and as soon as the State Water Board funding agreement is amended and the Mendocino County Amended Coastal Development Permit is approved.

Question 13: Erosion Control spec lists ESA fence, silt fence, waddles/fiber rolls, etc BMP’s with a statement “as shown on plans”. No BMP measures are shown on the plans. Please confirm desired BMP measures.

Response 13: Provide BMPs as necessary to prevent erosion from work activities. Anticipated applicable BMPs include ESA / construction fences, silt fences, waddles / fiber rolls and other measures as necessary and described in Section 31 25 00 and the Contractor’s approved Water Pollution Control Plan.

Question 14: Detail 3/C-502 shows a gate valve with an accompanying valve box for the water service with meter. Specs (page 33 11 00 – 8) have this service built as a saddle with a corp stop, which is typical construction. It is not standard practice to have a valve box for a corp stop. Please confirm that a valve box is only needed at an actual gate valve, in this case only the ones listed as Bid Item A-10.

Response 14: Provide gate valves in valve boxes with tapping service saddle for 2-inch and larger recycled water services. Refer to similar City of Santa Rosa Standard Detail 865-A. 1-inch recycled water services shown on the Drawings are to be provided in accordance with City of Santa Rosa Standard 861.

Question 15: Per Add1, Spec Section 33 11 00 Recycled Water Utilities 2.23 Accessories, please confirm Contractor is to only furnish one (1) electronic utility locator/detector to the Agency/Municipality and no additional locating work with this new piece of equipment is to be assumed by the Contractor.

Response 15: Confirmed.

Question 16: Please provide or direct me to the City of Santa Rosa standard details, I am unable to find them online.

Response 16: City of Santa Rosa standards are available online at https://www.srcity.org/2321/Design-Construction-Standards

Question 17: Sheet C107 has two call outs for additive bid alt 1. Please confirm this is the H-1 additive item and confirm that it includes everything from station 40+00 to 41+50.

Response 17: Additive Bid Alternate Schedule H extends the recycled water main approximately 150 feet between STA 40+00 to STA 41+47.88.

Question 18: The plan sheet keynotes on C110 call out all the sewer line work as bid schedule G. Please confirm this is an error.

Response 18: The work on C-110 is paid under Schedule F.

Question 19: The bid schedule item F-5 calls for five new two-way cleanouts when there is seven laterals being reconnected. These are not shown on the plans, and no detail is provided. Please advise.

Response 19: Provide new cleanouts on the sewer laterals that are reconnected on the east side of the main only similar to City of Santa Rosa Standard 513-A.

Question 20: Please confirm the sewer size on C110. The bid form and profile view says 6" sewer main, sheet C110 keynotes says 8".

Response 20: The sewer size on C-110 is 6 inch.

Question 21: Please confirm that we are only required to reconnect the sewer laterals on sheet C110 to the new 8" or 6" line in Evergreen St and will not have to chase them back any further than that as indicated by 4" SS lines shown on the plans.

Response 21: See response to Question 19. The design intent is to provide the cleanout within 5-ft of the main.

Revised Contract Provisions:

1. Revised bid forms are included.

Revised Technical Specifications:

None

Revised Drawings:

The following revised drawings are included with this addendum:

1. Drawing C-101 is revised to clarify PG&E service requirements.
2. Drawing C-107 is revised to clarify bid schedule.
3. Drawing C-110 is revised to clarify main size, north arrow orientation, sewer lateral requirements and bid schedule.
4. Drawing C-402 is revised to clarify PG&E service requirements.
5. Drawing C-501 is revised to clarify Detail 2 surface restoration requirements
6. Drawing C-502 is revised to clarify Detail 1 fire hydrant color requirements.
7. Drawing C-503 is revised to clarify Detail 5 the depth of the wet well and referencing a new wet well cover detail on new Drawing C-504.
8. Drawing C-504 is added showing the details of the new wet well cover including davit crane sleeve and lifting hooks. The davit crane sleeve will be field located and installed.

All other terms and conditions remain in full force and effect.



Ryan Rhoades
Superintendent

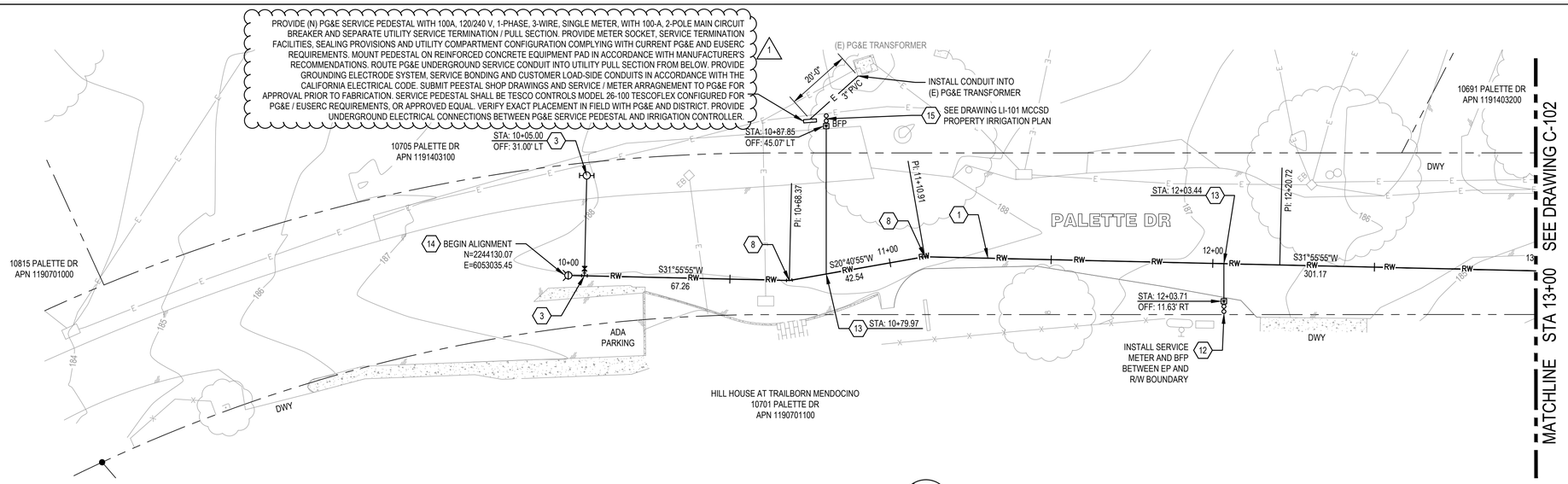

1 PLAN VIEW

0 10' 20' 40'

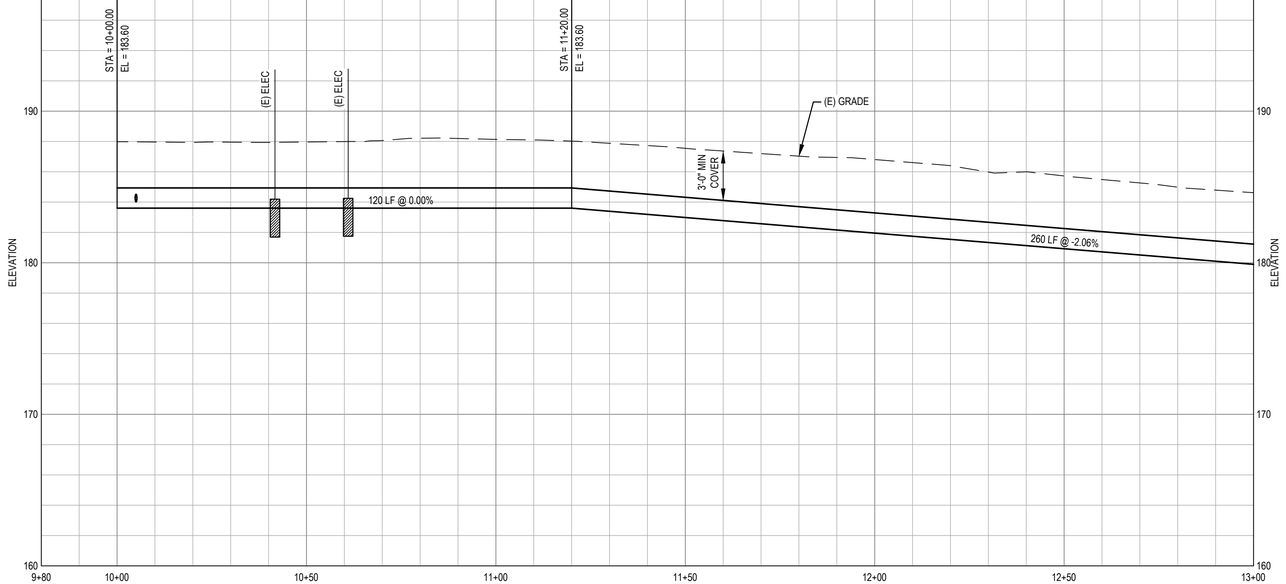

2 PROFILE VIEW

0 2.5' 5' 10' VERTICAL
0 10' 20' 40' HORIZONTAL

SHEET GENERAL NOTES

1. LOCATION OF EXISTING UTILITIES AND STRUCTURES ARE FROM INFORMATION AVAILABLE AT THE TIME OF DESIGN. EXACT LOCATION AND COMPLETENESS ARE NOT GUARANTEED. CONTRACTOR SHALL NOTIFY THE OWNER AND UNDERGROUND SERVICES ALERT (800) 227-2600 OR 811 A MINIMUM OF 48 HOURS PRIOR TO EXCAVATION AND SHALL POTHOLE FOR EXACT LOCATION. CONTRACTOR IS RESPONSIBLE FOR LOCATING EXISTING UTILITIES.
2. THE MINIMUM ALLOWABLE PIPE COVER OVER ALL PIPES 4" NOMINAL DIAMETER AND LARGER SHALL BE 36" AS MEASURED FROM FINISH GRADE TO THE TOP OF THE PIPE.
3. PROVIDE A MINIMUM OF 12" VERTICAL CLEARANCE BETWEEN (E) WATER UTILITY AND (N) RECYCLED WATER MAIN. BACKFILL BETWEEN UTILITIES WITH CONTROLLED DENSITY FILL SLURRY, MIN 5' FROM CROSSING EACH WAY. PROVIDE A MINIMUM OF 6" SAND AROUND UTILITIES IF USING CONTROLLED DENSITY FILL SLURRY IN ACCORDANCE WITH MENDOT STD NO. A60A AND A60B.
4. PROVIDE A MINIMUM OF 6" VERTICAL CLEARANCE BETWEEN (E) UNDERGROUND SEWER AND (N) RECYCLED WATER MAIN. PROVIDE A MINIMUM OF 12" OF VERTICAL CLEARANCE BETWEEN (E) POWER, TELECOMMUNICATIONS, AND GAS UTILITIES AND (N) RECYCLED WATER MAIN. PROVIDE A MINIMUM OF 18" OF VERTICAL CLEARANCE BETWEEN (E) STORM DRAINS AND (N) RECYCLED WATER MAIN.
5. THE MINIMUM ALLOWABLE RADIUS ON 8" NOMINAL DIAMETER PIPE SHALL BE 189 FEET. CURVATURE OF THE PIPE SHALL BE ACCOMPLISHED THROUGH LONGITUDINAL BENDING OF THE PIPE BARREL. DEFLECTION OF JOINTS IS NOT ALLOWED.
6. PRIOR TO BACKFILLING, VERIFY THAT THE MANUFACTURER'S ASSEMBLY MARK ON THE PIPE JOINT IS FLUSH WITH THE END OF THE BELL.
7. ALL ELBOWS, BENDS, TEES, VALVES, AND OTHER DUCTILE IRON FITTINGS INSTALLED ON THE RECYCLED WATER PIPELINE SHALL BE MECHANICALLY RESTRAINED AS SHOWN ON DETAIL 6 ON SHEET C-502.
8. PROVIDE ALL FITTINGS AND TRANSITION COUPLINGS TO PROVIDE A COMPLETE AND WORKING SYSTEM.
9. CONTRACTOR TO LOCATE STREET LIGHTING CONDUIT AND CABLE.
10. MAPPING BETWEEN STA 40+00 AND STA 40+92 IS APPROXIMATE AND NOT A PRODUCT OF SURVEY.
11. REFER TO GENERAL ELECTRICAL NOTES AND PG&E SERVICE NOTES ON DRAWING G-003 FOR GENERAL ELECTRICAL SERVICE CONSTRUCTION REQUIREMENTS.

SHEET KEYNOTES

1. PROVIDE 8" PVC DR 18 RECYCLED WATER MAIN.
2. PROVIDE 8" GATE VALVE, UNO. SEE DETAIL 4 ON DRAWING C-502.
3. PROVIDE FIRE HYDRANT. SEE DETAIL 1 ON DRAWING C-502.
4. PROVIDE 8" TEE, UNO.
5. PROVIDE 8" 90° ELBOW, UNO.
6. PROVIDE 8" 45° ELBOW, UNO.
7. PROVIDE 8" 22.5° ELBOW, UNO.
8. PROVIDE 8" 11.25° ELBOW, UNO.
9. PROVIDE HIGH DEFLECTION COUPLING, ROMAC ALPHA OR APPROVED EQUAL.
10. PROVIDE AIR RELEASE VALVE AT HIGH POINT IN RECYCLED WATER MAIN. SEE DETAIL 2 ON DRAWING C-502.
11. PROVIDE RESTRAINED MECHANICAL PLUGS WHERE SHOWN ON PLAN.
12. PROVIDE BACKFLOW PREVENTER AND PRESSURE REDUCER. SEE DETAIL 5 ON DRAWING C-502.
13. PROVIDE 2" RECYCLED WATER SERVICE AND METER. SEE DETAIL 3 ON DRAWING C-502.
14. PROVIDE PERMANENT BLOWOFF IN ACCORDANCE WITH CITY OF SANTA ROSA STANDARD 861.
15. REMOVE AND REPLACE (E) STOP SIGN AND SNS ON NEW POSTS IN ACCORDANCE WITH CALTRANS STANDARD PLAN RS5 AS NECESSARY TO CONSTRUCT RW PIPE.
16. REMOVE (E) RESTRAINED MECHANICAL PLUG. PROVIDE 10"x8" REDUCER AND CONNECT TO (E) RW PIPE.
17. REPLACE ANGLED PARKING SPACE STRIPING, 6-INCH WHITE STRIPE, 2-PART PAINT. MATCH (E) IN KIND.
18. REPLACE (E) CROSSWALK STRIPING, 12-INCH WHITE THERMOPLASTIC IN ACCORDANCE WITH COUNTY DEPARTMENT OF TRANSPORTATION ROAD STANDARDS, TAB E.
19. REMOVE AND REPLACE (E) RIGHT TURN SIGN ON NEW POST IN ACCORDANCE WITH CALTRANS STANDARD PLAN RS5 AS NECESSARY TO CONSTRUCT RW PIPE.
20. REMOVE (E) BOLLARDS AND CONCRETE FOUNDATIONS.
21. REMOVE (E) FIRE HYDRANT, BURY AND PIPING AND PLUG (E) PIPE AT FACE OF CURB.
22. PROVIDE 1" RECYCLED WATER SERVICE AND METER IN ACCORDANCE WITH CITY OF SANTA ROSA STANDARD 861 AND 1" REDUCED PRESSURE BACKFLOW DEVICE IN ACCORDANCE WITH CITY OF SANTA ROSA STANDARD 876. CONTRACTOR PROVIDES METER. PROVIDE BFP ENCLOSURE IN ACCORDANCE WITH DETAIL 5 ON DRAWING C-502.

No.	Issue	Drawn	Approved	Date
1	ADDENDUM NO. 2 REVISIONS	CB	MK	11/18/2026

Bar is one inch on original size sheet
0 1"

Reuse of Documents
This document and the ideas and designs incorporated herein, as an instrument of professional service, is the property of GHD and shall not be reused in whole or in part for any other project without GHD's written authorization.
© 2026 GHD

REGISTERED PROFESSIONAL ENGINEER MATTHEW GLEN KENNEDY 25830 CIVIL STATE OF CALIFORNIA

GHD Inc.
2235 Mercury Way Suite 150
Santa Rosa California 95407 USA
T 1 707 523 1010 F 1 707 527 8679 W www.ghd.com

This document shall not be used for construction unless signed and sealed for construction.

Drawn	C. BACH	Designer	M. KENNEDY
Drafting Check	M. KENNEDY	Design Check	M. KENNEDY
Project Manager	M. KENNEDY	Date	NOVEMBER 2026
		Scale	AS SHOWN

Client MENDOCINO CITY COMMUNITY SERVICES DISTRICT
Project RECYCLED WATER EXPANSION PROJECT
Title RECYCLED WATER LINE - STA 10+00 TO 13+00
Project No. 12619547
Original Size ANSI D
Drawing No. C-101
Sheet 5 of 31

Plot Date: 6 November 2026 - 4:38 PM Plotted By: Chris Bach
Filename: C:\acdsk\accdocs\ghd services pty ltd\12619547 - mccsd rw project\project files\01 wip\civil\acad-rcwe\sheets\12619547-GHD-RCWE-DWG-CI-101.dwg

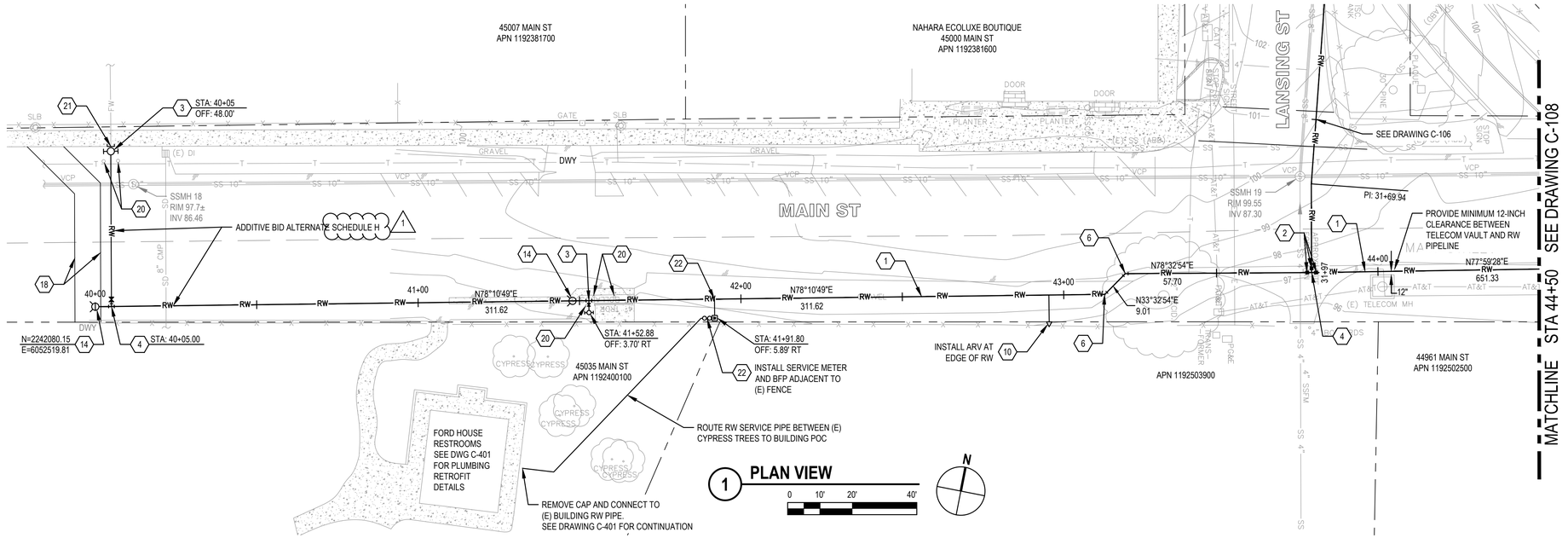

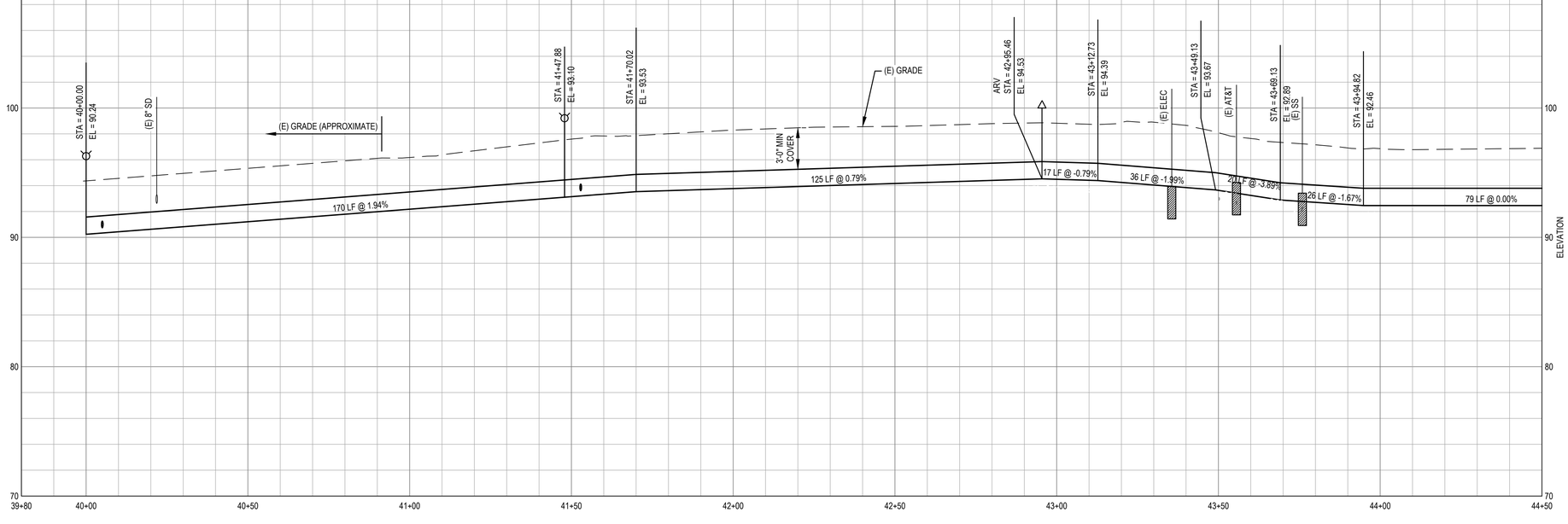

2 PROFILE VIEW

0 2.5' 5' 10' VERTICAL
0 10' 20' 40' HORIZONTAL

SHEET GENERAL NOTES

1. LOCATION OF EXISTING UTILITIES AND STRUCTURES ARE FROM INFORMATION AVAILABLE AT THE TIME OF DESIGN. EXACT LOCATION AND COMPLETENESS ARE NOT GUARANTEED. CONTRACTOR SHALL NOTIFY THE OWNER AND UNDERGROUND SERVICES ALERT (800) 227-2600 OR 811 A MINIMUM OF 48 HOURS PRIOR TO EXCAVATION AND SHALL POTHOLE FOR EXACT LOCATION. CONTRACTOR IS RESPONSIBLE FOR LOCATING EXISTING UTILITIES.
2. THE MINIMUM ALLOWABLE PIPE COVER OVER ALL PIPES 4" NOMINAL DIAMETER AND LARGER SHALL BE 36" AS MEASURED FROM FINISH GRADE TO THE TOP OF THE PIPE.
3. PROVIDE A MINIMUM OF 12" VERTICAL CLEARANCE BETWEEN (E) WATER UTILITY AND (N) RECYCLED WATER MAIN. BACKFILL BETWEEN UTILITIES WITH CONTROLLED DENSITY FILL SLURRY, MIN 5' FROM CROSSING EACH WAY. PROVIDE A MINIMUM OF 6" SAND AROUND UTILITIES IF USING CONTROLLED DENSITY FILL SLURRY IN ACCORDANCE WITH MENDOT STD NO. A60A AND A60B.
4. PROVIDE A MINIMUM OF 6" VERTICAL CLEARANCE BETWEEN (E) UNDERGROUND SEWER AND (N) RECYCLED WATER MAIN. PROVIDE A MINIMUM OF 12" OF VERTICAL CLEARANCE BETWEEN (E) POWER, TELECOMMUNICATIONS, AND GAS UTILITIES AND (N) RECYCLED WATER MAIN. PROVIDE A MINIMUM OF 18" OF VERTICAL CLEARANCE BETWEEN (E) STORM DRAINS AND (N) RECYCLED WATER MAIN.
5. THE MINIMUM ALLOWABLE RADIUS ON 8" NOMINAL DIAMETER PIPE SHALL BE 189 FEET. CURVATURE OF THE PIPE SHALL BE ACCOMPLISHED THROUGH LONGITUDINAL BENDING OF THE PIPE BARREL. DEFLECTION OF JOINTS IS NOT ALLOWED.
6. PRIOR TO BACKFILLING, VERIFY THAT THE MANUFACTURER'S ASSEMBLY MARK ON THE PIPE JOINT IS FLUSH WITH THE END OF THE BELL.
7. ALL ELBOWS, BENDS, TEES, VALVES, AND OTHER DUCTILE IRON FITTINGS INSTALLED ON THE RECYCLED WATER PIPELINE SHALL BE MECHANICALLY RESTRAINED AS SHOWN ON DETAIL 6 ON SHEET C-502.
8. PROVIDE ALL FITTINGS AND TRANSITION COUPLINGS TO PROVIDE A COMPLETE AND WORKING SYSTEM.
9. CONTRACTOR TO LOCATE STREET LIGHTING CONDUIT AND CABLE.
10. MAPPING BETWEEN STA 40+00 AND STA 40+92 IS APPROXIMATE AND NOT A PRODUCT OF SURVEY.
11. REFER TO GENERAL ELECTRICAL NOTES AND PG&E SERVICE NOTES ON DRAWING G-003 FOR GENERAL ELECTRICAL SERVICE CONSTRUCTION REQUIREMENTS.

SHEET KEYNOTES

1. PROVIDE 8" PVC DR 18 RECYCLED WATER MAIN.
2. PROVIDE 8" GATE VALVE, UNO. SEE DETAIL 4 ON DRAWING C-502.
3. PROVIDE FIRE HYDRANT. SEE DETAIL 1 ON DRAWING C-502.
4. PROVIDE 8" TEE, UNO.
5. PROVIDE 8" 90° ELBOW, UNO.
6. PROVIDE 8" 45° ELBOW, UNO.
7. PROVIDE 8" 22.5° ELBOW, UNO.
8. PROVIDE 8" 11.25° ELBOW, UNO.
9. PROVIDE HIGH DEFLECTION COUPLING, ROMAC ALPHA OR APPROVED EQUAL.
10. PROVIDE AIR RELEASE VALVE AT HIGH POINT IN RECYCLED WATER MAIN. SEE DETAIL 2 ON DRAWING C-502.
11. PROVIDE RESTRAINED MECHANICAL PLUGS WHERE SHOWN ON PLAN.
12. PROVIDE BACKFLOW PREVENTER AND PRESSURE REDUCER. SEE DETAIL 5 ON DRAWING C-502.
13. PROVIDE 2" RECYCLED WATER SERVICE AND METER. SEE DETAIL 3 ON DRAWING C-502.
14. PROVIDE PERMANENT BLOWOFF IN ACCORDANCE WITH CITY OF SANTA ROSA STANDARD 861.
15. REMOVE AND REPLACE (E) STOP SIGN AND SNS ON NEW POSTS IN ACCORDANCE WITH CALTRANS STANDARD PLAN RS5 AS NECESSARY TO CONSTRUCT RW PIPE.
16. REMOVE (E) RESTRAINED MECHANICAL PLUG. PROVIDE 10"x8" REDUCER AND CONNECT TO (E) RW PIPE.
17. REPLACE ANGLED PARKING SPACE STRIPING, 6-INCH WHITE STRIPE, 2-PART PAINT. MATCH (E) IN KIND.
18. REPLACE (E) CROSSWALK STRIPING, 12-INCH WHITE THERMOPLASTIC IN ACCORDANCE WITH COUNTY DEPARTMENT OF TRANSPORTATION ROAD STANDARDS, TAB E.
19. REMOVE AND REPLACE (E) RIGHT TURN SIGN ON NEW POST IN ACCORDANCE WITH CALTRANS STANDARD PLAN RS5 AS NECESSARY TO CONSTRUCT RW PIPE.
20. REMOVE (E) BOLLARDS AND CONCRETE FOUNDATIONS.
21. REMOVE (E) FIRE HYDRANT, BURY AND PIPING AND PLUG (E) PIPE AT FACE OF CURB.
22. PROVIDE 1" RECYCLED WATER SERVICE AND METER IN ACCORDANCE WITH CITY OF SANTA ROSA STANDARD 861 AND 1" REDUCED PRESSURE BACKFLOW DEVICE IN ACCORDANCE WITH CITY OF SANTA ROSA STANDARD 876. CONTRACTOR PROVIDES METER. PROVIDE BFP ENCLOSURE IN ACCORDANCE WITH DETAIL 5 ON DRAWING C-502.

No.	Issue	Drawn	Approved	Date
1	ADDENDUM NO. 2 REVISIONS	CB	MK	11/18/2026

Bar is one inch on original size sheet
0 1"

Reuse of Documents
This document and the ideas and designs incorporated herein, as an instrument of professional service, is the property of GHD and shall not be reused in whole or in part for any other project without GHD's written authorization.
© 2026 GHD

REGISTERED PROFESSIONAL ENGINEER — HIAN GLEN KENNARD — 093304 — CIVIL — STATE OF CALIFORNIA

GHD Inc.
2235 Mercury Way Suite 150
Santa Rosa California 95407 USA
T 1 707 523 1010 F 1 707 527 8679 W www.ghd.com

This document shall not be used for construction unless signed and sealed for construction.

Drawn	C. BACH	Designer	M. KENNEDY
Drafting Check	M. KENNEDY	Design Check	M. KENNEDY
Project Manager	M. KENNEDY	Date	NOVEMBER 2026
		Scale	AS SHOWN

Client MENDOCINO CITY COMMUNITY SERVICES DISTRICT
Project RECYCLED WATER EXPANSION PROJECT
Title RECYCLED WATER LINE - STA 40+00 TO 44+50
Project No. 12619547
Original Size ANSI D
Drawing No. C-107
Sheet 11 of 31

Plot Date: 6 November 2026 - 4:41 PM
Plotted By: Chris Bach
Filename: C:\adsk\accdocs\ghd services pty ltd\12619547 - mccsd rw project\project files\01 wip\civil\acad-rcwe\sheets\12619547-GHD-RCWE-DWG-CI-101.dwg



1 PLAN VIEW

0 10' 20' 40'

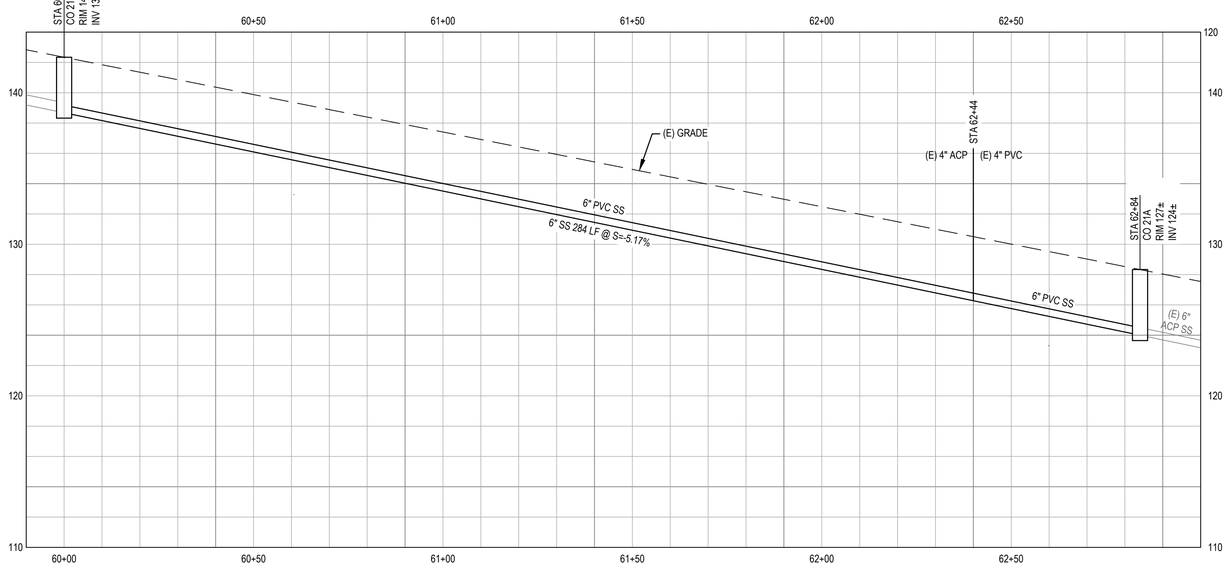

2 PROFILE VIEW

0 2' 4' 8' VERTICAL
0 10' 20' 40' HORIZONTAL

SHEET GENERAL NOTES

1. LOCATION OF EXISTING UTILITIES AND STRUCTURES ARE FROM INFORMATION AVAILABLE AT THE TIME OF DESIGN. EXACT LOCATION AND COMPLETENESS ARE NOT GUARANTEED. CONTRACTOR SHALL NOTIFY THE OWNER AND UNDERGROUND SERVICES ALERT (800) 227-2600 OR 811 A MINIMUM OF 48 HOURS PRIOR TO EXCAVATION AND SHALL POTHOLE FOR EXACT LOCATION. CONTRACTOR IS RESPONSIBLE FOR LOCATING EXISTING UTILITIES.
2. THE MINIMUM ALLOWABLE PIPE COVER OVER ALL PIPES 4" NOMINAL DIAMETER AND LARGER SHALL BE 36" AS MEASURED FROM FINISH GRADE TO THE TOP OF THE PIPE.
3. THIS PLAN IS NOT A PRODUCT OF SURVEY. LAYOUT AND ELEVATIONS SHOWN ARE APPROXIMATE AND BASED ON FIELD INVESTIGATIONS, VISUAL OBSERVATIONS, AND CCTV VIDEO INSPECTION REPORTS.
4. PRIOR TO BACKFILLING, VERIFY THAT THE MANUFACTURER'S ASSEMBLY MARK ON THE PIPE JOINT IS FLUSH WITH THE END OF THE BELL.
5. CONTRACTOR TO LOCATE STREET LIGHTING CONDUIT AND CABLE.

SHEET KEYNOTES

1. REMOVE (E) 4" ACP SEWER MAIN. INSTALL (N) 6" PVC SS MAIN IN THE SAME ALIGNMENT (BID SCHEDULE F).
2. REMOVE (E) CLEANOUT AND PROVIDE (N) SSMH. SEE DETAIL 1 ON DRAWING C-503 (BID SCHEDULE F).
3. RECONNECT (E) SS LATERAL USING INSERTA TEE FITTING OR APPROVED EQUAL. ENSURE A WATERTIGHT CONNECTION (BID SCHEDULE F).
4. PROVIDE 2-WAY CLEANOUT SIMILAR TO CITY OF SANTA ROSA STANDARD 513-A. INSTALL WITHIN 5-FT OF MAIN CONNECTION (BID SCHEDULE F).

No.	Issue	Drawn	Approved	Date
1	ADDENDUM NO. 2 REVISIONS	CB	MK	11/18/2026

Bar is one inch on original size sheet
0 1"

Reuse of Documents
This document and the ideas and designs incorporated herein, as an instrument of professional service, is the property of GHD and shall not be reused in whole or in part for any other project without GHD's written authorization.
© 2026 GHD

REGISTERED PROFESSIONAL ENGINEER
THEW GLEN KENNEDY
C68304
CIVIL
STATE OF CALIFORNIA

GHD Inc.
2235 Mercury Way Suite 150
Santa Rosa California 95407 USA
T 1 707 523 1010 F 1 707 527 8679 W www.ghd.com

Drawn	C. BACH	Designer	M. KENNEDY
Drafting Check	M. KENNEDY	Design Check	M. KENNEDY
Project Manager	M. KENNEDY	Date	NOVEMBER 2026
This document shall not be used for construction unless signed and sealed for construction.		Scale	AS SHOWN

Client: MENDOCINO CITY COMMUNITY SERVICES DISTRICT
Project: RECYCLED WATER EXPANSION PROJECT
Title: EVERGREEN STREET SANITARY SEWER LINE
STA 60+00 TO 62+84
Project No. 12619547
Original Size: ANSI D
Drawing No. C-110
Sheet 14 of 31

Plot Date: 6 November 2026 - 4:42 PM Plotted By: Chris Bach Filename: C:\adsk\acodocs\ghd services pty ltd\12619547 - mccsd rw project\project files\01 wip\civil\acad-rcwe\sheets\12619547-GHD-RCWE-DWG-CI-101.dwg

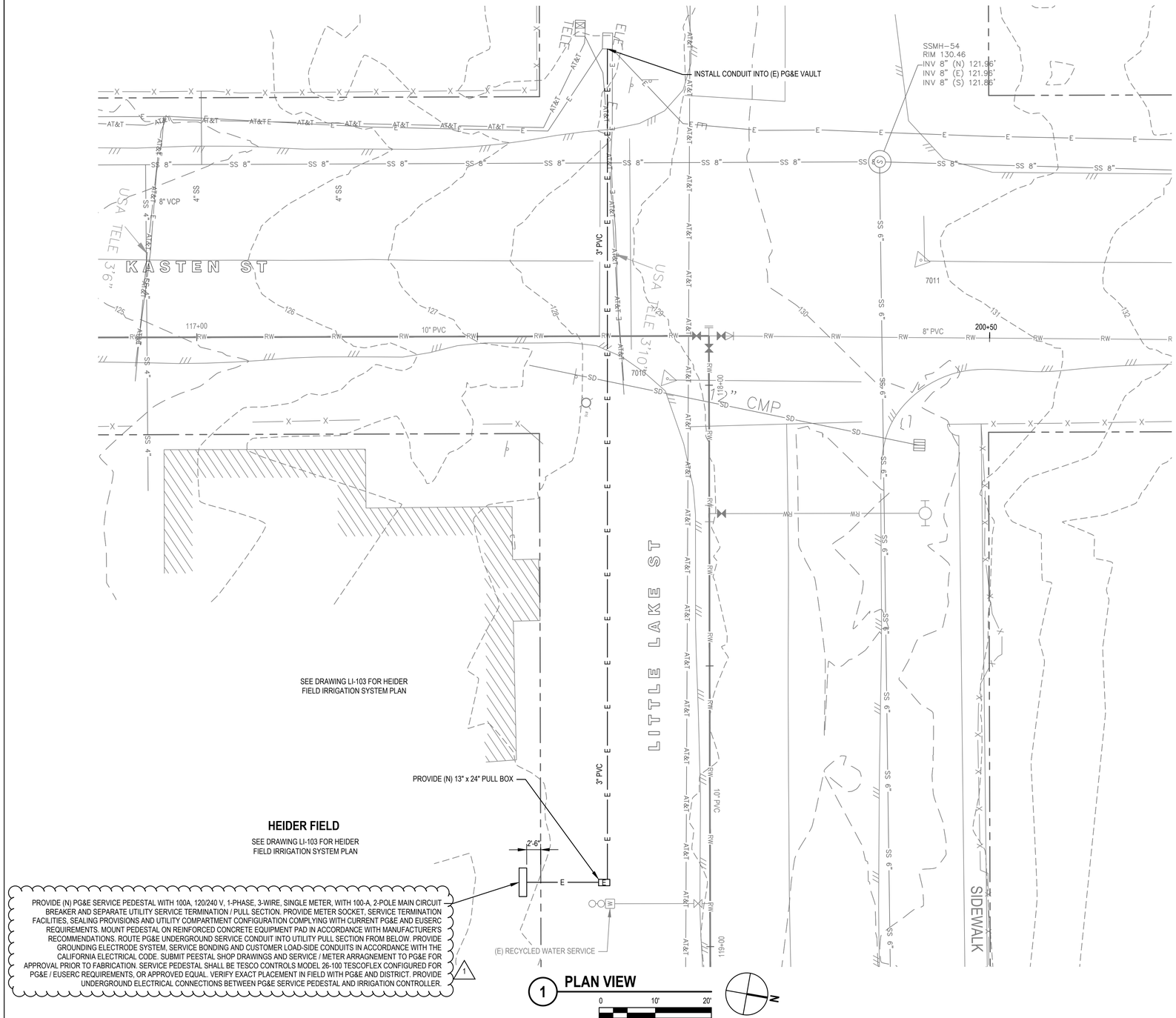

1 PLAN VIEW

0 10' 20'

N

SHEET GENERAL NOTES

1. REFER TO GENERAL ELECTRICAL NOTES AND PG&E SERVICE NOTES ON DRAWING G-003 FOR GENERAL ELECTRICAL SERVICE CONSTRUCTION REQUIREMENTS.

No.	Issue	Drawn	Approved	Date
1	ADDENDUM NO. 2 REVISIONS	CB	MK	11/18/2026

Bar is one inch on original size sheet

0 1"

Reuse of Documents
This document and the ideas and designs incorporated herein, as an instrument of professional service, is the property of GHD and shall not be reused in whole or in part for any other project without GHD's written authorization.
© 2026 GHD

REGISTERED PROFESSIONAL ENGINEER
THEW GLEN KENNEDY
C68304
CIVIL
STATE OF CALIFORNIA

GHD Inc.
2235 Mercury Way Suite 150
Santa Rosa California 95407 USA
T 1 707 523 1010 F 1 707 527 8679 W www.ghd.com

Drawn	C.BACH	Designer	M. KENNEDY
Drafting Check	M. KENNEDY	Design Check	M. KENNEDY
Project Manager	M. KENNEDY	Date	NOVEMBER 2026
This document shall not be used for construction unless signed and sealed for construction.		Scale	AS SHOWN

Client MENDOCINO CITY COMMUNITY SERVICES DISTRICT
Project RECYCLED WATER EXPANSION PROJECT
Title HEIDER FIELD PG&E SERVICE
Project No. 12619547
Original Size ANSI D
Drawing No. C-402
Sheet 16 of 31

Plot Date: 6 November 2026 - 4:44 PM Plotted By: Chris Bach Filename: C:\ADSK\ACCDocs\GHD Services Pty Ltd\12619547 - MCCSD RW Project\Project Files\01 WIP\Civil\ACAD-RCWE\Sheets\12619547-GHD-RCWE-DWG-CI-402.dwg

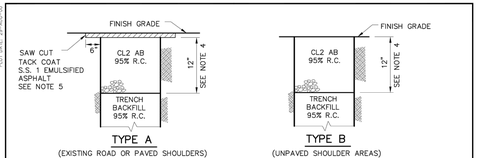

TRENCH BACKFILL AND SURFACING

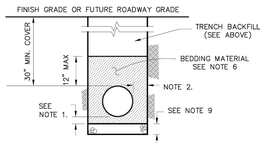

PIPE BEDDING

NOTE:
SEE MENDOT STD. A60B AND A60C FOR ALL TRENCH RESTORATION NOTES.

MENDOCINO COUNTY

TRENCH RESTORATION SECTIONS | MENDOT STD. NO. A60A | SCALE: NONE | DESIGN: HND | DRAWN: HND | FEB. 2008 | PAGE: A-44

PLOT DATE: 23-AUG-26
FILE: G:\CIVIL\JOB PROJECTS\2023\DWGS-A60.DWG

TRENCH RESTORATION NOTES:

1. BEDDING BELOW PIPE SHALL BE AS REQUIRED BY UTILITY OR AGENCY THAT OWNS THE FACILITY.
2. 12" MIN., OR 6" MIN. IF SLURRY CEMENT BACKFILL IS USED. SEE NOTE 10.
3. RELATIVE COMPACTION DESIGNATED R.C.
4. THE MINIMUM ROAD STRUCTURAL SECTION SHALL BE A MIN. OF 3" A.C. ON 12" CL. 2 A.B. OR SHALL MATCH EXISTING PAVEMENT THICKNESS WHICHEVER IS THICKER, UNLESS OTHERWISE SHOWN ON THE PLANS. STRUCTURAL SECTION IN SHOULDERS SHALL MATCH EXISTING AND SHALL BE A MIN. OF 8" CL. 2 A.B.
5. NEATLY CUT PAVEMENT SIX INCHES FROM EDGE OF TRENCH AFTER TRENCH IS BACKFILLED. SS1 DESIGNATES SS1 ASPHALTIC EMULSION PER CALTRANS STANDARD SPECIFICATION, SECTION 94, ASPHALTIC EMULSION.
6. **MATERIAL SPECIFICATIONS**

6a. DRAIN ROCK SHALL BE EITHER OF THE NOMINAL SIZES DESIGNATED AS 1-1/2" BY 3/4" OR 2-1/2" BY 1-1/2".

6b. PIPE BEDDING AND TRENCH BACKFILL MATERIAL SHALL BE A WELL GRADED GRAVEL/SAND MATERIAL AND SHALL HAVE A MINIMUM SAND EQUIVALENT VALUE OF 20 AND SHALL CONFORM TO THE FOLLOWING GRADINGS:

PERCENT PASSING

	3"	3/4"	3/8"	NO. 4	NO. 16	NO. 30	NO. 200
PIPE BEDDING		100	80-100	10-50	5-30		0-4
TRENCH BACKFILL	100			35-100		20-100	

6c. IN ADDITION, WHEN TESTED WITH THE FOLLOWING SERIES OF SIEVES, NO MORE THAN 25% OF THE MATERIAL WILL BE RETAINED BETWEEN ANY ADJACENT SIEVES: 3", 2-1/2", 2", 1-1/2", 1", 3/4", 1/2", 3/8", NO. 4, NO. 8, NO. 16, NO. 30, NO. 50, NO. 100, AND NO. 200.

6d. **AGGREGATE BASE** CL 2 A.B. DESIGNATES CLASS 2 AGGREGATE BASE AND SHALL CONFORM TO THE PROVISIONS OF SECTION 26 OF THE COUNTY STANDARD SPECIFICATIONS.

6e. **NATIVE MATERIAL** SHALL NOT CONTAIN ROCKS LARGER THAN 3".

MENDOCINO COUNTY

TRENCH RESTORATION NOTES | MENDOT STD. NO. A60B | SCALE: NONE | DESIGN: HND | DRAWN: HND | FEB. 2008 | PAGE: A-45

PLOT DATE: 23-AUG-26
FILE: G:\CIVIL\JOB PROJECTS\2023\DWGS-A60.DWG

7. **COMPACTION REQUIREMENTS:** (AS SHOWN ON A60A AND IN THE FOLLOWING MODIFICATIONS)

7a. **DRAIN ROCK** SHALL BE CONSOLIDATED WITH VIBRATORY COMPACTION EQUIPMENT TO A MINIMUM R.C. OF 90%.

7b. **PIPE BEDDING MATERIAL** SHALL BE CONSOLIDATED WITH VIBRATORY COMPACTION EQUIPMENT TO A MINIMUM R.C. OF 90%.

7c. **GENERAL:** THE COMPACTION REQUIREMENTS SHALL BE ACHIEVED UTILIZING METHODS AND EQUIPMENT APPROVED BY THE COUNTY. ANY METHOD OF COMPACTION WHICH FAILS TO UNIFORMLY ACHIEVE THE REQUIRED LEVELS OF COMPACTION THROUGHOUT THE LENGTH AND DEPTH OF TRENCHES SHALL BE DISCONTINUED. COMPACTION METHODS AND EQUIPMENT SHALL BE SUCH AS NOT TO DAMAGE THE INSTALLED PIPE, EXCEED ITS LOADING CAPACITY OR DISTURB ITS ALIGNMENT. FLOODING, PONDING OR JETTING WILL NOT BE ALLOWED.

7d. **MECHANICAL COMPACTION:** TRENCH BACKFILL SHALL BE PLACED IN UNIFORM, HORIZONTAL LAYERS NOT EXCEEDING EIGHT (8) INCHES IN THICKNESS BEFORE COMPACTION. EACH LAYER SHALL BE COMPACTED, USING MECHANICAL MEANS, TO THE SPECIFIED DENSITY SHOWN ON THE PLANS.

THE CONTRACTOR MAY, AT CONTRACTOR'S SOLE OPTION AND AT CONTRACTOR'S SOLE EXPENSE, CONSTRUCT A TEST TRENCH SECTION WHICH DEMONSTRATES METHODS, EQUIPMENT, OR MATERIALS WHICH WILL RELIABLY ACHIEVE THE REQUIRED COMPACTION IN LIFTS GREATER THAN 8 INCHES. AT ITS SOLE DISCRETION, THE COUNTY MAY INCREASE THE MAXIMUM ALLOWABLE LIFT THICKNESS PERMITTED BASED UPON THE RESULTS DEMONSTRATED BY THE TEST TRENCH SECTION. SHOULD SUBSEQUENT TESTING DEMONSTRATE THAT THE REQUIRED COMPACTION IS NOT BEING RELIABLY ACHIEVED, THE COUNTY MAY, AT ITS SOLE DISCRETION, REDUCE THE MAXIMUM LIFT THICKNESS TO ITS ORIGINAL VALUE OF 8 INCHES.

8. **TRENCHING METHODS:** ROCK WHEEL TRENCHING SHALL BE ALLOWED FOR TRENCH CONSTRUCTION IN COUNTY ROADS. INSTALLATION OF CABLE USING THE PLOW METHOD SHALL NOT BE ALLOWED.
9. **TRENCH BASE:** TRENCH BASE SHALL BE STABILIZED USING ADDITIONAL PIPE BEDDING; DRAIN ROCK, OR OTHER SUITABLE MATERIAL AS DIRECTED BY UTILITY, COUNTY DOT, OR CIVIL ENGINEER IN RESPONSIBLE CHARGE OF THE WORK.
10. **SLURRY CEMENT BACKFILL:** SLURRY CEMENT BACKFILL MAY BE USED FOR TRENCH BACKFILL ONLY AS AUTHORIZED BY COUNTY DOT, BUT SHALL BE REQUIRED WHEN TRENCH WIDTHS OF LESS THAN 12 INCHES ARE REQUESTED. SLURRY CEMENT BACKFILL SHALL MEET THE REQUIREMENTS OF SECTION 19-3.062, SLURRY CEMENT BACKFILL, OF THE CALTRANS STANDARD SPECIFICATIONS, UNLESS COUNTY DOT DIRECTOR APPROVES A SPECIFIC MIX DESIGN.

MENDOCINO COUNTY

TRENCH RESTORATION NOTES (CONTINUED) | MENDOT STD. NO. A60C | SCALE: NONE | DESIGN: RCW | DRAWN: LMM | OCT. 2000 | PAGE: A-46

1 MENDOCINO COUNTY TRENCH RESTORATION REQUIREMENTS

NOT TO SCALE

NOTES:
1. WIDER TRENCHES SHALL REQUIRE HIGHER STRENGTH PIPE AND/OR SPECIAL BEDDING.
2. DIFFERING TRENCH WIDTHS REQUIRE PRIOR APPROVAL OF ENGINEER.
3. WARNING TAPE SHALL BE BURIED 12 INCHES BELOW FINISHED GRADE.
4. TRACER WIRE SHALL BE ATTACHED DIRECTLY TO THE TOP OF THE PIPE.
5. TRENCH BACKFILL AND PAVING WITHIN COUNTY R/W AND ON COUNTY ROADS SHALL BE PER MENDOCINO COUNTY TRENCH RESTORATION DETAILS, SEE DETAIL 1 THIS SHEET.
6. RESTORE PAVED SURFACES PER DETAIL 1 AND DETAIL 4 ON THIS SHEET.
7. PIPE BEDDING WITHIN THE COUNTY RIGHT-OF-WAY SHALL BE IN ACCORDANCE WITH THIS DETAIL.

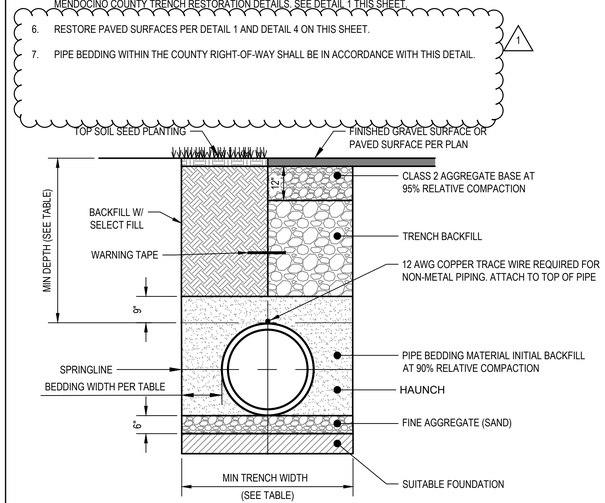

MINIMUM TRENCH DEPTHS	
PIPE DIA	MIN DEPTH OF COVER
1-2"	18"
3"	24"
4"	36"
6"	36"
8"	36"

MINIMUM BEDDING WIDTHS	
PIPE DIA	MIN BEDDING WIDTH
<4"	14"
4" - 12"	6"

2 TYPICAL TRENCH SECTION

NOT TO SCALE

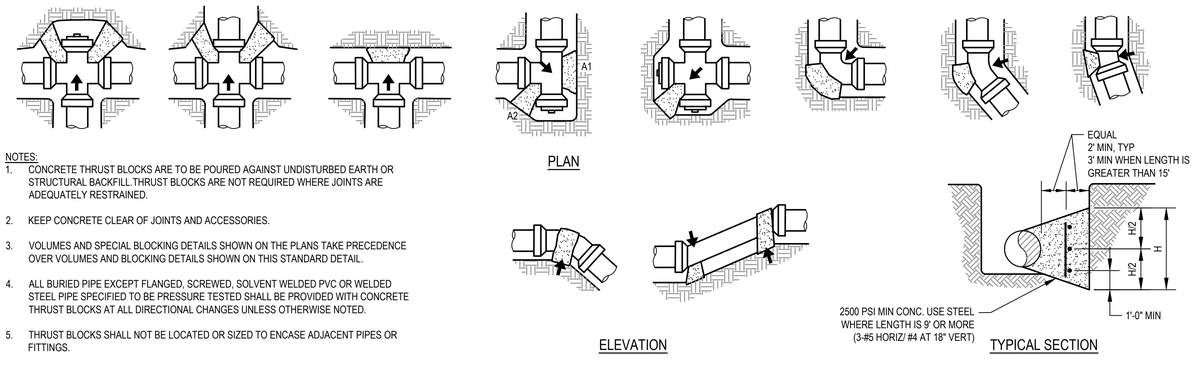

NOTES:
1. CONCRETE THRUST BLOCKS ARE TO BE POURED AGAINST UNDISTURBED EARTH OR STRUCTURAL BACKFILL.THRUST BLOCKS ARE NOT REQUIRED WHERE JOINTS ARE ADEQUATELY RESTRAINED.
2. KEEP CONCRETE CLEAR OF JOINTS AND ACCESSORIES.
3. VOLUMES AND SPECIAL BLOCKING DETAILS SHOWN ON THE PLANS TAKE PRECEDENCE OVER VOLUMES AND BLOCKING DETAILS SHOWN ON THIS STANDARD DETAIL.
4. ALL BURIED PIPE EXCEPT FLANGED, SCREWED, SOLVENT WELDED PVC OR WELDED STEEL PIPE SPECIFIED TO BE PRESSURE TESTED SHALL BE PROVIDED WITH CONCRETE THRUST BLOCKS AT ALL DIRECTIONAL CHANGES UNLESS OTHERWISE NOTED.
5. THRUST BLOCKS SHALL NOT BE LOCATED OR SIZED TO ENCASE ADJACENT PIPES OR FITTINGS.
6. THE SIZE AND WEIGHT OF ALL UPLIFT THRUST BLOCKS SHALL BE AS DETERMINED BY ENGINEER.
7. THE BEARING AREAS ARE BASED ON TEST PRESSURE OF 150 PSI AND ALLOWABLE SOIL BEARING STRESS OF 1000 POUNDS PER SQUARE FOOT. TO COMPUTE BEARING AREAS FOR DIFFERENT TEST PRESSURES AND SOIL BEARING STRESSES, USE THE FOLLOWING EQUATION:
   BEARING AREA = $\left(\frac{\text{TEST PRESSURE}}{150}\right)$ x $\left(\frac{1000}{\text{SOIL BEARING STRESS}}\right)$ x (TABLE VALUE)
   TEST PRESSURE = 250 PSI
   SOIL BEARING STRESS = 5,000 PSF
8. THRUST BLOCKS REQUIRED ONLY WHERE SHOWN ON PLAN.
9. CONTRACTOR TO PROVIDE ALL COMPONENTS.
10. ALL PIPE AND FITTINGS SHALL BE WRAPPED IN POLYETHYLENE TO PREVENT CORROSION AND CONCRETE ADHESION.

BEARING AREA OF THRUST BLOCK IN SQ. FT. (SEE NOTE 7)

PIPE SIZE	TEE, WYE, PLUG OR CAP	90° BEND PLUGGED CROSS	TEE PLUGGED A1	TEE PLUGGED A2	45° BEND	22 1/2° BEND	11 1/4° BEND
4	1.5	2	2	1.5	1.5	1	1
6	3	4.5	4.5	3	2.5	1.5	1
8	5	7	7	5	4	2	1

3 STANDARD THRUST BLOCK DETAIL

NOT TO SCALE

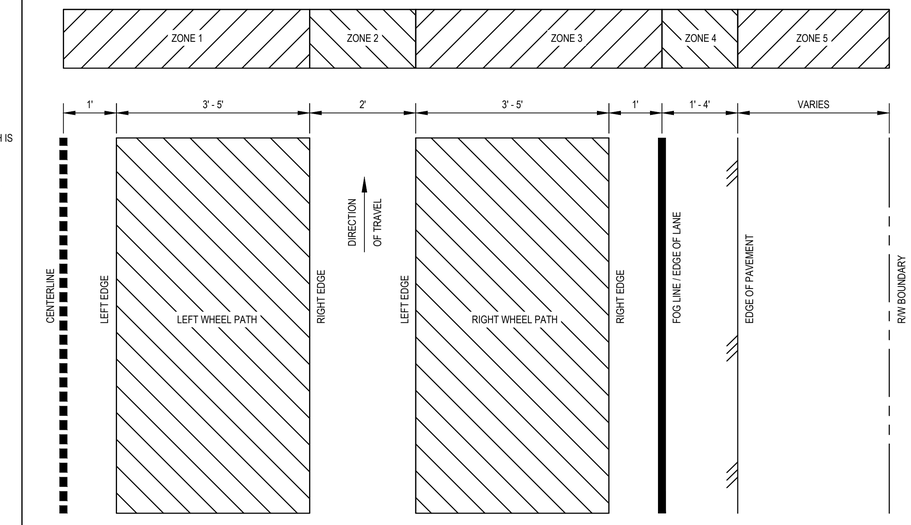

NOTES:
1. THIS DETAIL ILLUSTRATES THE GENERAL PAVEMENT REPAIR REQUIREMENTS FOR COUNTY STANDARD A60A TYPE A T-SECTION TRENCH RESTORATIONS WITHIN EXISTING PAVED TRAVEL LANES IN THE COUNTY OF MENDOCINO R/W.
2. THE DIMENSIONS SHOWN MAY VARY DEPENDING ON THE ACTUAL LANE WIDTH AND SHOULDER WIDTH.
3. ZONE 1 LEFT WHEEL PATH: TRENCHES WITHIN ZONE 1 REQUIRE REPAVING FROM THE ROAD CENTERLINE TO THE RIGHT EDGE OF THE LEFT WHEEL PATH.
4. ZONE 2 CENTER OF LANE: TRENCHES WITHIN ZONE 2 REQUIRE REPAVING OF THE LANE FROM THE ROAD CENTERLINE TO THE FOG LINE. IF THE PAVED SHOULDER IS LESS THAN 2-FT WIDE, REPAVING SHALL EXTEND TO THE EDGE OF PAVEMENT.
5. ZONE 3 RIGHT WHEEL PATH: TRENCHES WITHIN ZONE 3 REQUIRE REPAVING FROM THE CENTER OF THE LANE TO THE FOG LINE. IF THE PAVED SHOULDER IS LESS THAN 2-FT WIDE, REPAVING SHALL EXTEND TO THE EDGE OF PAVEMENT.
6. ZONE 4 PAVED SHOULDER: TRENCHES WITHIN ZONE 4 REQUIRE REPAVING OF THE TYPE A T-SECTION ONLY. REPAVING IS LIMITED TO THE TYPE A T-SECTION UNLESS THE REMAINING PAVED SHOULDER IS LESS THAN 2-FT IN WIDTH IN WHICH CASE THE ENTIRE SHOULDER SHALL BE REPAVED.
7. ZONE 5 UNPAVED SHOULDER: TRENCHES WITHIN ZONE 5 SHALL BE REPAIRED IN ACCORDANCE WITH THE COUNTY STANDARD A60A TYPE B TRENCH RESTORATION.

4 COUNTY TRAVEL LANE TRENCH REPAIR

NOT TO SCALE

No.	Issue	Drawn	Approved	Date
1	ADDENDUM NO. 2 REVISIONS	CB	MK	11/18/2026

Bar is one inch on original size sheet
0 1"

Reuse of Documents
This document and the ideas and designs incorporated herein, as an instrument of professional service, is the property of GHD and shall not be reused in whole or in part for any other project without GHD's written authorization.
© 2026 GHD

REGISTERED PROFESSIONAL ENGINEER — HEIDI GLEN KENNEDY — 68304 — CIVIL — STATE OF CALIFORNIA

GHD Inc.
2235 Mercury Way Suite 150
Santa Rosa California 95407 USA
T 1 707 523 1010 F 1 707 527 8679 W www.ghd.com

This document shall not be used for construction unless signed and sealed for construction.

Drawn	C. BACH	Designer	M. KENNEDY
Drafting Check	M. KENNEDY	Design Check	M. KENNEDY
Project Manager	M. KENNEDY	Date	NOVEMBER 2026
		Scale	AS SHOWN

Client MENDOCINO CITY COMMUNITY SERVICES DISTRICT
Project RECYCLED WATER EXPANSION PROJECT
Title CIVIL DETAILS 1
Project No. 12619547
Original Size ANSI D
Drawing No. C-501
Sheet 17 of 31

Plot Date: 6 November 2026 - 4:45 PM | Plotted By: Chris Bach | Filename: C:\adsk\accdocs\ghd services pty ltd\12619547 - mccsd rw project\project files\01 wip\civil\acad-rcwe\sheets\12619547-GHD-RCWE-DWG-CI-501.dwg

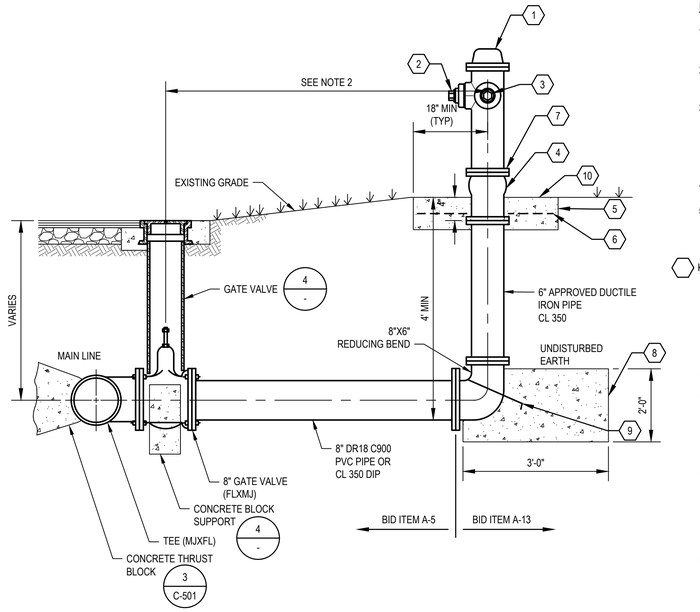

NOTES:

1. NO OBSTRUCTIONS WILL BE PERMITTED WITHIN 3 FT. IN ALL DIRECTIONS OF FIRE HYDRANT.
2. FIRE HYDRANTS MUST BE INSTALLED A MINIMUM OF 4-FT FROM THE EDGE OF PAVEMENT.
3. VALVE MAY BE CONNECTED TO TEE AT MAIN LINE. USE FLANGED JOINT ENDS. WHERE SPOOL IS REQUIRED BETWEEN TEE AND VALVE, USE FLANGED MECHANICAL ENDS WITH ¾" DIAMETER TIE RODS.
4. ALL JOINTS AND FITTINGS SHALL BE RESTRAINED.
5. PAINT FIRE HYDRANT BODY WHITE AND CAP AND NOZZLES NEW LONDON BURGUNDY WITH "RECYCLED WATER DO NOT DRINK" LETTERING, OR AS APPROVED BY MHRB.

KEYNOTES:

1. FIRE HYDRANT (WET BARREL ONLY), IN ACCORDANCE WITH SECTION 33 11 00.
2. PUMPER NOZZLE 4½" TO BE FACING THE TRAVELED WAY, UNLESS OTHERWISE NOTED IN THE PLANS.
3. HOSE NOZZLE 2 x 2½".
4. BREAK OFF CHECK VALVE.
5. 3'x3'x6" CONC. SQ. PAD, TO BE CONSTRUCTED AROUND FIRE HYDRANT'S CENTER LINE WHEN NOT LOCATED WITHIN SIDEWALK OR CONC. AREA.
6. #10; 6/6 WWF.
7. BREAKAWAY FLANGE.
8. CONC. THRUST BLOCK, APPROX. 2'x2'x3' TO BE POURED AGAINST UNDISTURBED EARTH
9. 2"x1/4" STEEL ANCHOR PINS.
10. TOP OF SLAB SHALL BE 4" BELOW THE BREAK LINE OF THE HYDRANT.

1 FIRE HYDRANT LATERAL NOT TO SCALE

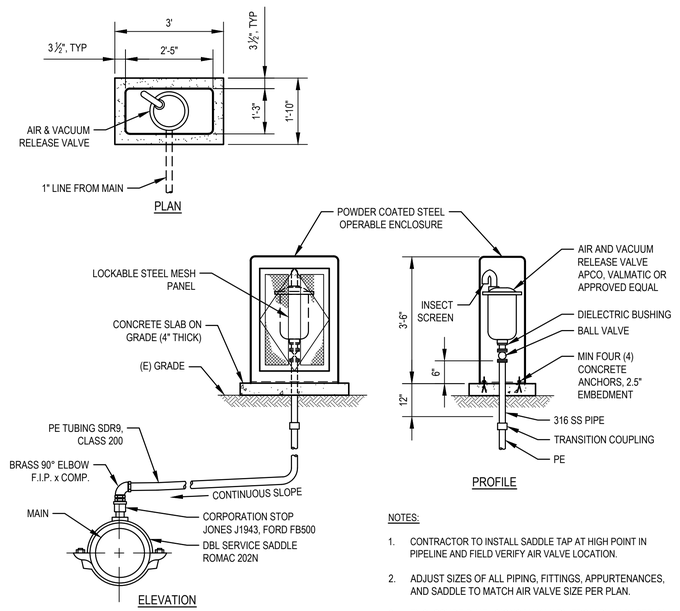

NOTES:

1. CONTRACTOR TO INSTALL SADDLE TAP AT HIGH POINT IN PIPELINE AND FIELD VERIFY AIR VALVE LOCATION.
2. ADJUST SIZES OF ALL PIPING, FITTINGS, APPURTENANCES, AND SADDLE TO MATCH AIR VALVE SIZE PER PLAN.
3. ENCLOSURE DIMENSIONS MAY VARY FROM PLAN BASED ON MANUFACTURER. PROVIDE SUFFICIENT INTERIOR CLEARANCE BETWEEN VALVE AND ENCLOSURE.

2 AIR RELEASE/VACUUM VALVE NOT TO SCALE

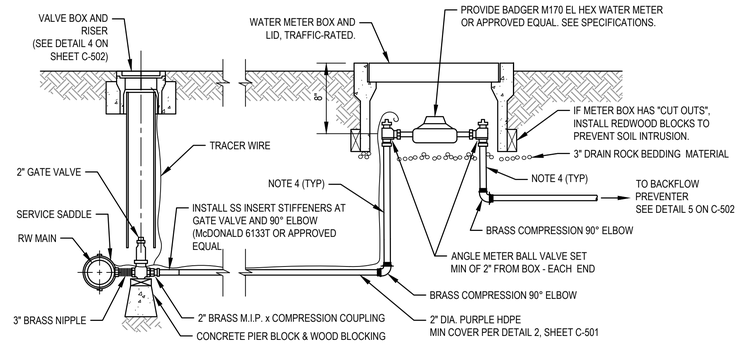

NOTES:

1. SERVICE LATERAL BEDDING MATERIAL TO BE COMPACTED TO MINIMUM 90% R.C. IN ACCORDANCE WITH ASTM D1557 PRIOR TO INSTALLATION OF POLYETHYLENE SERVICE TUBING.
2. METER BOX SHALL BE INSTALLED SO THAT TOP IS 1" ABOVE FINISH GRADE.
3. PROVIDE TRAFFIC RATED BOX AND LID.
4. SERVICE PIPE MATERIALS BETWEEN SERVICE METER AND BFP SHALL BE COPPER (TYPE K) WITH BRASS COMPRESSION FITTINGS OR THREADED BRASS PIPING WITH THREADED BRASS FITTINGS.
5. PROVIDE MIN 12" LONG THREADED BRASS NIPPLE WITH BRASS TO PVC ADAPTER COUPLING.

3 WATER SERVICE METER NOT TO SCALE

NOTES:

1. A BURIED VALVE 5' AND DEEPER SHALL BE PROVIDED WITH A SOLID STEEL EXTENSION STEM OPERATOR WITH A 2" SQUARE AWWA NUT WITHIN 36" OF VALVE BOX COVER. NUT IS TO INDICATE DIRECTION OF ROTATION TO OPEN VALVE.
2. CONTRACTOR SHALL REMOVE ALL DEBRIS AND SOIL FROM VALVE BOX BEFORE ACCEPTANCE.
3. CONCRETE COLLAR FLUSH WITH FINISHED GRADE FOR PAVED AREA AND 2" ABOVE FINISHED GRADE FOR UNPAVED AREA.
4. JOINTS, BOLTS AND NUTS SHALL BE CLEAR OF CONCRETE.
5. VALVE BOX SHALL BE CHRISTY MODEL G5 TRAFFIC BOX, OR APPROVED EQUAL.
6. VALVE SIZE AS SHOWN ON PLANS.
7. WRAP VALVE IN POLYETHYLENE PRIOR TO POURING CONCRETE.

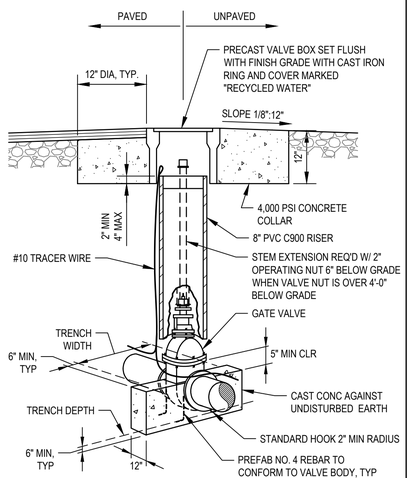

4 GATE VALVE NOT TO SCALE

NOTES:

1. REDUCED PRESSURE (RP) BACKFLOW PREVENTION DEVICE SHALL BE CENTERED ON CONCRETE PAD.
2. SERVICE PIPE MATERIAL BETWEEN SERVICE METER AND BFP SHALL BE COPPER (TYPE K) WITH BRASS COMPRESSION FITTINGS OR THREADED BRASS PIPING WITH THREADED BRASS FITTINGS.
3. ALL VERTICAL JOINTS AND FITTINGS SHALL BE RESTRAINED.
4. RP AND PIPING SHALL MATCH ADJOINING PIPE SIZE.
5. PROVIDE POWDER COATED STEEL OPERABLE ENCLOSURE WITH MESH PANEL.
6. PROVIDE MIN 12" LONG THREADED BRASS NIPPLE WITH BRASS TO PVC ADAPTER COUPLING.

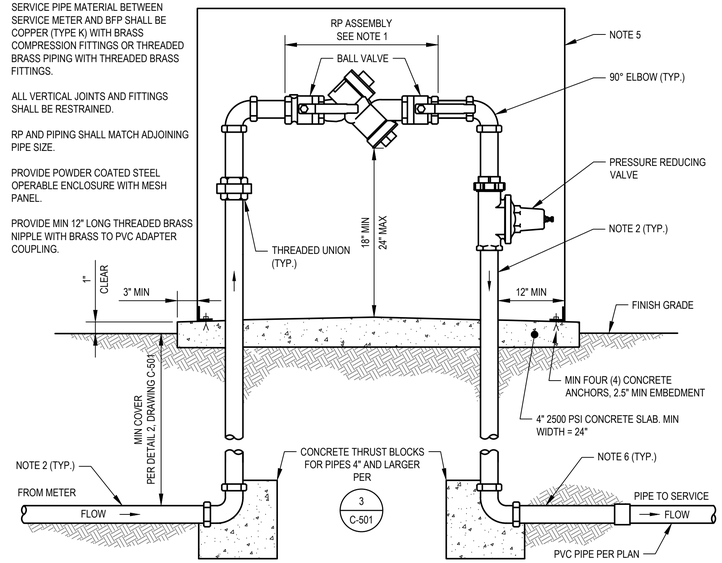

5 REDUCED PRESSURE BACKFLOW PREVENTER NOT TO SCALE

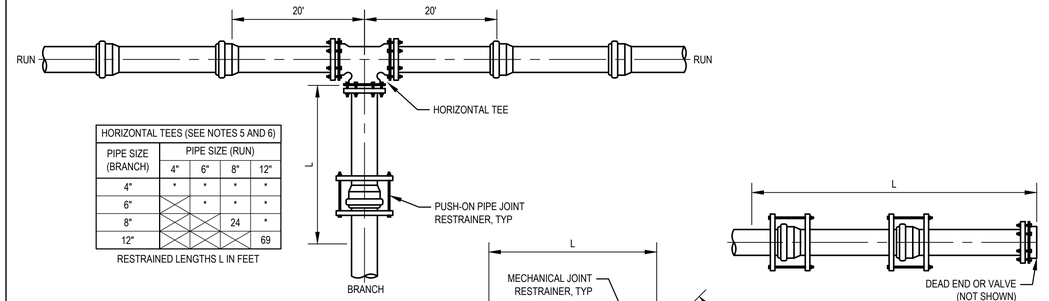

HORIZONTAL TEES (SEE NOTES 5 AND 6)				
PIPE SIZE (BRANCH)	PIPE SIZE (RUN)			
	4"	6"	8"	12"
4"	*	*	*	*
6"		*	*	*
8"			24	*
12"				69

RESTRAINED LENGTHS L IN FEET

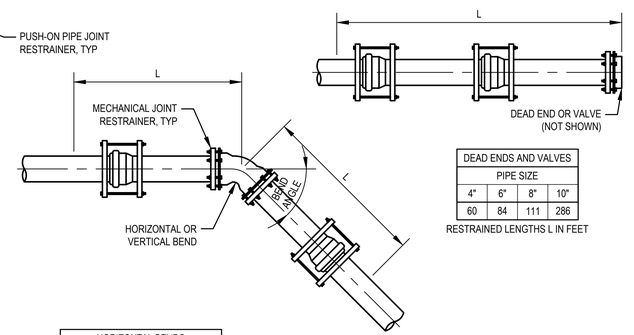

DEAD ENDS AND VALVES			
PIPE SIZE			
4"	6"	8"	10"
60	84	111	286

RESTRAINED LENGTHS L IN FEET

NOTES:

1. ALL JOINTS WITHIN LENGTH "L" MUST BE RESTRAINED. IF THE DISTANCE BETWEEN FITTINGS IS LESS THAN OR EQUAL TO THE RESTRAINT LENGTH, RESTRAIN ALL JOINTS BETWEEN THOSE FITTINGS.
2. LENGTHS LISTED ARE MINIMUMS. RESTRAINTS SHALL BE INSTALLED TO THE NEXT JOINT BEYOND THE LENGTH SPECIFIED.
3. IF ACTUAL CONDITIONS DIFFER FROM THOSE LISTED ABOVE OR THE REQUIRED RESTRAINED LENGTH CANNOT BE MET, THE RESTRAINED LENGTH SHALL BE DETERMINED BY THE DISTRICT.
4. ALL RESTRAINED LENGTHS ARE BASED ON PVC PIPE, SOIL TYPE ML (SOIL TYPE ML (INORGANIC SILTS, VERY FINE SANDS, ROCK FLOUR, SILTY OR CLAYEY FINE SANDS, PER UCS CLASSIFICATION ASTM D 2487), SAFETY FACTOR OF 1.5, TRENCH TYPE 3, DEPTH OF BURY OF 4', AND A TEST PRESSURE OF 250 PSI.
5. FOR RUN SIDE OF HORIZONTAL TEES, RESTRAIN BOTH RUN SIDE JOINTS AT THE TEE AND INSTALL A FULL LENGTH OF PIPE ON EACH RUN SIDE.
6. FOR BRANCH SIDE OF HORIZONTAL TEES WITH * CONDITION, RESTRAIN ONLY THE BRANCH SIDE JOINT AT THE TEE. NO ADDITIONAL JOINT RESTRAINTS REQUIRED ALONG THE BRANCH PIPE.

HORIZONTAL BENDS				
BEND ANGLE	PIPE SIZE			
	4"	6"	8"	10"
11.25°	3	4	5	6
22.5°	5	7	9	12
45°	11	15	19	24
90°	25	35	46	57

RESTRAINED LENGTHS L IN FEET

VERTICAL BENDS				
BEND ANGLE	PIPE SIZE			
	4"	6"	8"	10"
11.25°	6	9	11	14
22.5°	12	17	22	28
45°	25	35	46	57

RESTRAINED LENGTHS L IN FEET

6 RESTRAINT LENGTH DETAILS NOT TO SCALE

No.	Issue	Drawn	Approved	Date
1	ADDENDUM NO. 2 REVISIONS	CB	MK	11/18/2026

Bar is one inch on original size sheet
0 1"

Reuse of Documents
This document and the ideas and designs incorporated herein, as an instrument of professional service, is the property of GHD and shall not be reused in whole or in part for any other project without GHD's written authorization.
© 2026 GHD

STEVEN GLEN KENNEDY 663304 REGISTERED PROFESSIONAL ENGINEER CIVIL STATE OF CALIFORNIA

GHD Inc.
2235 Mercury Way Suite 150
Santa Rosa California 95407 USA
T 1 707 523 1010 F 1 707 527 8679 W www.ghd.com

This document shall not be used for construction unless signed and sealed for construction.

Drawn	C. BACH	Designer	M. KENNEDY
Drafting Check	M. KENNEDY	Design Check	M. KENNEDY
Project Manager	M. KENNEDY	Date	NOVEMBER 2026
		Scale	AS SHOWN

Client MENDOCINO CITY COMMUNITY SERVICES DISTRICT
Project RECYCLED WATER EXPANSION PROJECT
Title CIVIL DETAILS 2
Project No. 12619547
Original Size ANSI D
Drawing No. C-502
Sheet 18 of 31

Plot Date: 6 November 2026 - 4:46 PM Plotted By: Chris Bach
Filename: C:\adsk\accdocs\ghd services pty ltd\12619547 - mccsd rw project\project files\01 wip\civil\acad-rowe\sheets\12619547-GHD-RCWE-DWG-CI-502.dwg

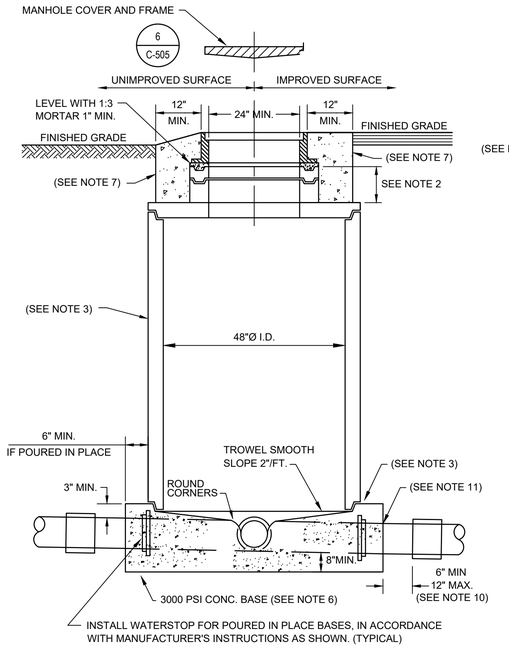

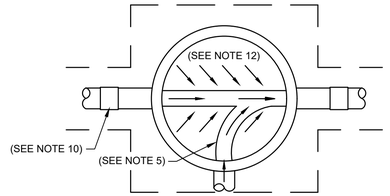

MANHOLE BASE
CHANNELIZATION PLAN

NOTES:

1. WHEN MANHOLES ARE INSTALLED IN UN-IMPROVED AREAS, THE TOP OF THE COVER SHALL BE A MIN. OF 4" ABOVE GRADE.
2. MIN. OF ONE 3" GRADE ADJUSTMENT RING. MAX. HEIGHT OF GRADE ADJUSTMENT RINGS = 20". ALTERNATELY, CONTRACTOR MAY CAST GRADE ADJUSTMENT RINGS IN PLACE.
3. SET ALL BARREL SECTIONS & TAPER SECTIONS IN PLASTIC GASKET, RAM-NEK OR APPROVED ALTERNATE. TYPICAL JOINT USE (1) 3/4"X 2-1/2" RAM-NEK SEAL.
4. SHAPE MANHOLE BENCH AND INVERT TO DIRECT FLOW TOWARD THE DOWNSTREAM END OF THE MANHOLE.
5. AFTER LOWER RING SECTION IS SET, BREAK OUT TOP HALF OF PIPE FLUSH WITH INSIDE FACE OF M.H. WALL AND CONINSTRUCT SHELF AND U-SHAPED CHANNEL. MAKE ELEVATION CHANGES GRADUALLY AND DIRECTIONAL CHANGES WITH SMOOTH CURVES. SLOPE AND SIZE OF CHANNELS SHALL MATCH UPSTREAM AND DOWNSTREAM PIPES. MANHOLE CHANNELS WITH A HORIZONTAL CHANGE IN DIRECTION OF 30° OR MORE SHALL HAVE A MINIMUM DROP OF 0.1' ACROSS THE MANHOLE OR SHALL MATCH THE SLOPE OF THE PIPE, WHICHEVER IS GREATER.
6. POURED-IN-PLACE BASE SHALL BE POURED FULL THICKNESS ON UNDISTURBED SOIL. PRECAST BASE TO BE APPROVED BY ENGINEER AND PLACED ON 6" MINIMUM OF 3/4" DRAIN ROCK INSTALLED AGAINST UNDISTURBED EARTH.
7. 3000 PSI CONC. COLLAR SHALL BE FLUSH WITH FINISHED GRADE.
8. STANDARD MANHOLE BARREL SECTION PER ASTM C478.
9. 48"Ø I.D. M.H. TO BE USED FOR SEWER MAINS LESS THAN 18"Ø.
10. FLEXIBLE PIPE COUPLING IS REQUIRED ON ALL PIPE. FLEX COUPLING TO BE INSTALLED IN MAINLINE TRENCH AND OUT OF MANHOLE EXCAVATION.
11. WHEN CONNECTING NEW MAINS TO EXISTING MANHOLES, CORE EXISTING MANHOLE. JACK HAMMERING IS NOT ALLOWED. USE FLEXIBLE PIPE TO MANHOLE CONNECTOR TO SEAL OPENING. REPAIR BENCHES AND CHANNELS.

1 SANITARY SEWER MANHOLE

NOT TO SCALE

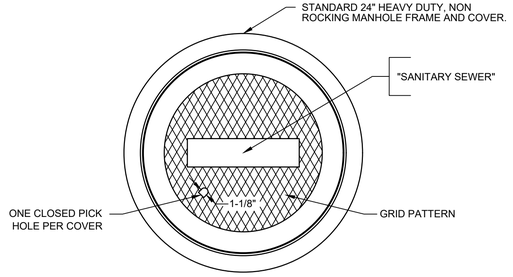

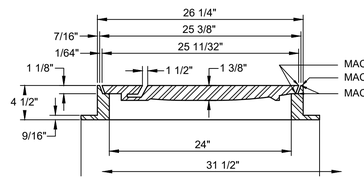

NOTES:

1. SPECIFY SANITARY SEWER WHEN ORDERING. ALL CASTINGS SHALL BE DIPPED IN APPROVED ASPHALTUM OR BITUMINOUS PAINT.
2. ALL MATERIAL USED IN MANUFACTURING SHALL CONFORM TO A.S.T.M. DESIGNATION A-48 CLASS 35 B, OR OF UNITED STATES GOVERNMENT SPECIFICATIONS QQ1-652B.
3. MINIMUM WEIGHT COMPONENTS: COVER - 130 POUNDS
   FRAME - 135 POUNDS
4. BOLT DOWN GASKETED COVERS ARE REQUIRED ON ALL SEWER MANHOLES. COAT THE BOLT THREADS ON FINAL BOLT UP WITH "NEVER CEASE" OR TEFLON BASED PIPE DOPE.

3 MANHOLE FRAME AND COVER

NOT TO SCALE

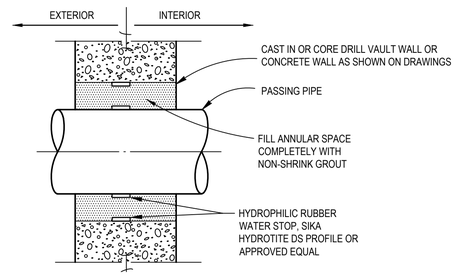

4 WALL PENETRATION

NOT TO SCALE

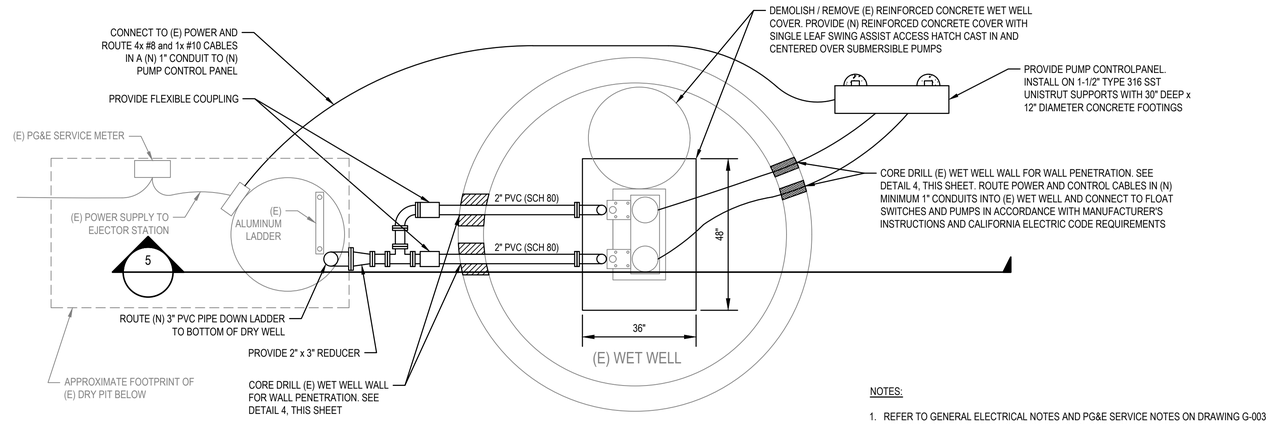

NOTES:

1. REFER TO GENERAL ELECTRICAL NOTES AND PG&E SERVICE NOTES ON DRAWING G-003 FOR GENERAL ELECTRICAL SERVICE CONSTRUCTION REQUIREMENTS.

2 MAIN STREET SEWER LIFT STATION MODIFICATION - PLAN

SCALE: 1" = 2'

NOTES:

1. REFER TO GENERAL ELECTRICAL NOTES AND PG&E SERVICE NOTES ON DRAWING G-003 FOR GENERAL ELECTRICAL SERVICE CONSTRUCTION REQUIREMENTS.

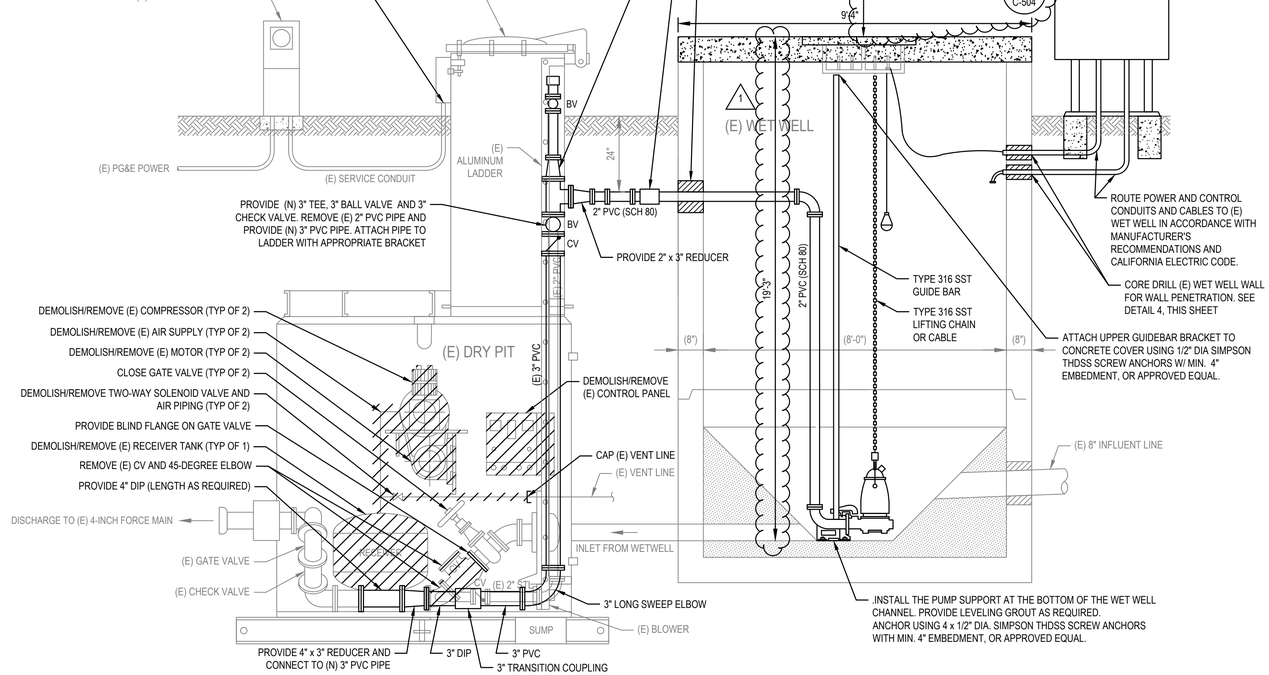

5 MAIN STREET SEWER LIFT STATION MODIFICATION - SECTION

SCALE: 1" = 2'

No.	Issue	Drawn	Approved	Date
1	ADDENDUM NO. 2 REVISIONS	CB	MK	11/18/2026

Bar is one inch on original size sheet
0 1"

Reuse of Documents
This document and the ideas and designs incorporated herein, as an instrument of professional service, is the property of GHD and shall not be reused in whole or in part for any other project without GHD's written authorization.
© 2026 GHD

REGISTERED PROFESSIONAL ENGINEER — KEVIN GLEN KENNEDY — 28304 — CIVIL — STATE OF CALIFORNIA

GHD Inc.
2235 Mercury Way Suite 150
Santa Rosa California 95407 USA
T 1 707 523 1010 F 1 707 527 8679 W www.ghd.com

This document shall not be used for construction unless signed and sealed for construction.

Drawn	C. BACH	Designer	M. KENNEDY
Drafting Check	M. KENNEDY	Design Check	M. KENNEDY
Project Manager	M. KENNEDY	Date	NOVEMBER 2026
		Scale	AS SHOWN

Client MENDOCINO CITY COMMUNITY SERVICES DISTRICT
Project RECYCLED WATER EXPANSION PROJECT
Title CIVIL DETAILS 3
Project No. 12619547
Original Size ANSI D
Drawing No. C-503
Sheet 19 of 31

Plot Date: 18 November 2026 - 1:34 PM Plotted By: Chris Bach
Filename: C:\adsk\acccdocs\ghd services pty ltd\12619547 - mccsd rw project\project files\01 wip\civil\acad-rcwe\sheets\12619547-GHD-RCWE-DWG-CI-503.dwg

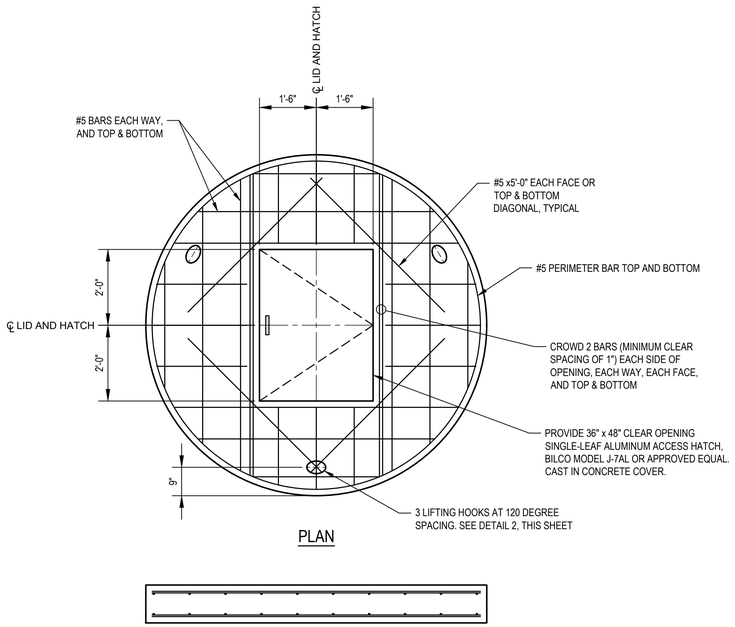

PLAN

SECTION

NOTES:

1. ALL CONCRETE SHALL BE NORMAL WEIGHT, WITH A MINIMUM COMPRESSIVE STRENGTH OF 4,000 PSI AT 28 DAYS.
2. CONCRETE REINFORCING COVER SHALL BE 2 INCHES.
3. ALL CONCRETE DIMENSIONS SHOWN ARE MINIMUM DIMENSIONS. CONTRACTOR TO REVIEW FORMING, REINFORCING DETAILS AND ANY EMBEDDED ITEMS AND DETERMINE PRIOR TO FABRICATION OF ANY REINFORCING, PLACEMENT REQUIREMENTS AND CLEARANCES.
4. ALL CONCRETE REINFORCING SHALL BE ASTM A615, Fy = 60 KSI.
5. WELDING OF REINFORCEMENT IS NOT PERMITTED.
6. LOCATE ALL REINFORCING AS SHOWN ON DRAWINGS AND FASTEN SECURELY.

1 CONCRETE WET WELL COVER NOT TO SCALE

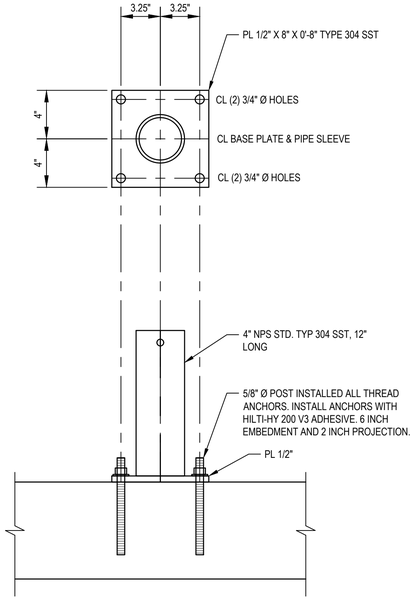

MOUNTING SLEEVE DETAIL

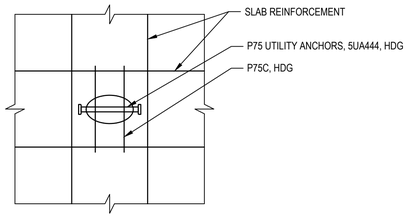

PLAN VIEW

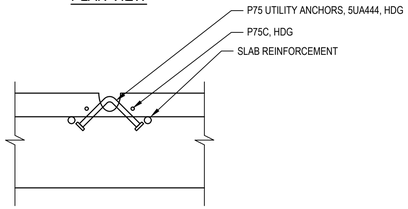

SECTION

LIFTING HOOK ORDER INFO:
DAYTON SUPERIOR
1125 BAYERS ROAD MIAMISBURG, OH 45342
INFO@DAYTONSUPERIOR.COM
800-745-3700

ORDER INFO:
6, P75 UTILITY ANCHORS, 5UA444
w/6, P75C, #127446, 8UA671 ANCHOR,
8 WIRE SPACING, 10" WALL

2 LIFTING HOOK DETAIL NOT TO SCALE

No.	Issue	Drawn	Approved	Date
1	ADDENDUM NO. 2 REVISIONS	CB	MK	11/18/2026

Bar is one inch on original size sheet
0 1"

Reuse of Documents
This document and the ideas and designs incorporated herein, as an instrument of professional service, is the property of GHD and shall not be reused in whole or in part for any other project without GHD's written authorization.
© 2026 GHD

REGISTERED PROFESSIONAL ENGINEER — HUGH GLEN KENNEDY — 068304 — CIVIL — STATE OF CALIFORNIA

GHD Inc.
2235 Mercury Way Suite 150
Santa Rosa California 95407 USA
T 1 707 523 1010 **F** 1 707 527 8679 **W** www.ghd.com

Drawn	C. BACH	Designer	M. KENNEDY
Drafting Check	M. KENNEDY	Design Check	M. KENNEDY
Project Manager	M. KENNEDY	Date	NOVEMBER 2026
This document shall not be used for construction unless signed and sealed for construction.		Scale	AS SHOWN

Client MENDOCINO CITY COMMUNITY SERVICES DISTRICT
Project RECYCLED WATER EXPANSION PROJECT
Title **CIVIL DETAILS 4**
Project No. **12619547**
Original Size **ANSI D**
Drawing No. **C-504**
Sheet **20** of **31**

Plot Date: 18 November 2026 - 1:38 PM Plotted By: Chris Bach
Filename: C:\adsk\accdocs\ghd services pty ltd\12619547 - mccsd rw project\project files\01 wip\civil\acad-rcwe\sheets\12619547-GHD-RCWE-DWG-CI-504.dwg

BID PROPOSAL

Recycled Water Expansion Project

Bidder's Name: _____

TO MENDOCINO CITY COMMUNITY SERVICES DISTRICT (the "DISTRICT" or "OWNER"):

In accordance with District's Notice Inviting Bids, the undersigned Bidder hereby proposes to furnish all materials, equipment, tools, labor, and incidentals required for the above stated project as set forth in the Contract Documents, and to perform all work in the manner and time prescribed.

Bidder declares that this proposal is based upon careful examination of the work site, Project Plans, and other Contract Documents, including the Notice Inviting Bids, this Proposal, the Contract, Special Provisions or Conditions, Technical Provisions, General Conditions, Appendices, and Standard Plans & Specifications. If this proposal is accepted for award, Bidder agrees to enter into a contract with the District at the unit and/or lump sum prices set forth in the following Bid Schedule. Bidder understands that failure to enter into a contract in the manner and time prescribed will result in forfeiture to the District of the Bid Security accompanying this proposal.

Bidder understands that a bid is required for the entire work, that the estimated quantities set forth in the Bid Schedules are solely for the purpose of comparing bids, and that final compensation under the contract will be based upon the actual quantities of work satisfactorily completed. It is agreed that the unit and/or lump sum prices bid include all appurtenant expenses, federal, state and local taxes, royalties, and fees. In the case of discrepancies in the amounts bid, unit prices shall govern over extended amounts.

Bidder agrees and acknowledges that it is aware of the provisions of Section 3700 of the Labor Code, which requires every employer to be insured against liability for worker's compensation or to undertake self-insurance in accordance with the provisions of that code, and that the Bidder will comply with such provisions of that code before commencing the performance of this Contract if awarded it.

Bidder certifies to be properly licensed by the State of California as a contractor to perform work of this specialty. The undersigned agrees to furnish the District satisfactory proof of ability to perform the work, as well as records of performance of similar jobs completed recently, if and when requested to do so by the Project Manager.

Bidder agrees that the applicable insurance and bonding requirements can and will be fulfilled.

Bidder declares that the only persons or parties interested in this proposal as principals are those named herein; that no officer, agent, or employee of the District is personally interested, directly or indirectly, in this proposal; that this proposal is made without connection to any other individual, firm, or corporation making a bid for the same work; and that this proposal is in all respects fair and without collusion or fraud.

Bidder certifies that in all previous contracts or subcontracts, all reports which may have been due under the requirements of any District, State, or Federal equal employment opportunity orders have been satisfactorily filed, and that no such reports are currently outstanding.

Bidder certifies to have verified that it and all subcontractors used on this public work project are registered with the DIR in compliance with Labor Code sections 1771.1 and 1725.5, and Bidder shall provide proof of registration for both itself and all subcontractors to the District.

Bidder agrees that it and all subcontractors used on the public work project shall furnish payroll records specified in Labor Code section 1776 directly to the Labor Commissioner in the manner required by Labor Code section 1771.4.

Bidder certifies that it and all subcontractors used on this public work project are in compliance with California Air Resources Board's In-Use Off-Road Diesel-Fueled Fleets Regulations (Cal. Code Regs., title 13, section 2449), and Bidder shall provide a valid Certificate of Reported Compliance for Bidder's own fleet and for any subcontractors' fleet, unless exempt from the regulations.

Bidder shall guarantee all work for a period of one year from project acceptance.

Bidder has carefully checked all of the figures in the Bid Schedule and understands that the District shall not be responsible for any errors or omissions on Bidder's part in making up this bid. Bidder agrees that this bid may not be withdrawn for a period of sixty (60) calendar days from the date of the bid opening and that the District reserves the right to reject any or all bids, waive any informality in bids received, and may at its option make the award that in the judgment of the District is to the best interest of the District.

The following documents have been completed and executed, and are made a part of this Contract by reference:

- ❑ DEPARTMENT OF INDUSTRIAL RELATIONS REGISTRATION
- ❑ DEBARMENT CERTIFICATION
- ❑ OFF ROAD REGULATIONS ASSURANCES
- ❑ BID SCHEDULE
- ❑ ADDENDA ACKNOWLEDGEMENT
- ❑ NON-COLLUSION AFFIDAVIT
- ❑ DESIGNATION OF SUBCONTRACTORS
- ❑ CONTRACTOR LICENSE INFORMATION
- ❑ BIDDER RESPONSIBILITY STATEMENT
- ❑ BIDDER'S SIGNATURE PAGE
- ❑ BIDDER'S BOND

DEPARTMENT OF INDUSTRIAL RELATIONS REGISTRATION

Recycled Water Expansion Project

The District has the obligation to report this contract to the Department of Industrial Relations ("DIR") and provide various information including that specified below. For the purposes of this document, you are referred to as "Contractor." In addition to filling out this form for the District, you have the obligation to submit certified payroll records directly to DIR.

Contractor Name:			
Contractor Mailing Address:			
Contractor E-mail Address:			
Contractor Telephone:			
Contractor License Number:			
DIR Registration Number:			
Classification(s) or type(s) of workers that will be employed by the contractor for this project:			
Subcontractors:	License Number:	DIR Number:	Worker Classifications:

I certify that the information set forth above is correct and that I am authorized to provide this information on behalf of the contractor named in the first line above.

_____ _____

(Signature) Date

_____

(Printed Name)

DEBARMENT CERTIFICATION

Recycled Water Expansion Project

By submitting its bid, Bidder certifies, in accordance with California Public Contract Code section 6109, that neither the Bidder nor any subcontractor included on the list of proposed subcontractors submitted with the bid is ineligible to perform work on public works projects pursuant to California Labor Code sections 1777.1 or 1777.7. In accordance with California Public Contract Code section 6109, contractors and subcontractors who are ineligible to perform work on public works projects pursuant to California Labor Code sections 1777.1 or 1777.7 may neither bid on, be awarded, or perform as a subcontractor on public works projects.

CONTRACTOR OFF-ROAD REGULATION ASSURANCES

The District requires that all work done on its property or otherwise on behalf of the District is performed in accordance with the State's environmental health and safety laws, codes and regulations. To this end, please check the appropriate boxes and provide information as required below related to compliance with California Air Resources Board (CARB) Off-Road Diesel-Fueled Fleets Regulations. The District will not approve this Contract until this form has been completed. This form must be updated annually or anytime changes occur. Contractor agrees to provide the District with any documents referenced below within one business day of the request. Information on these Regulations is available here: https://ww2.arb.ca.gov/our-work/programs/use-road-diesel-fueled-fleets-regulation

Contractor Name: _____

In the performance of this Contract, does Contractor propose to use vehicles subject to 13 CCR 2449, the In-Use Off-Road Diesel-Fueled Fleets Regulation? **YES** ☐ **NO** ☐

If the answer in above is **NO**, Contractor does not need to check any boxes for items 1, 2, and 3 below and no further information is required.

If the answer above is **YES:**

A. Contractor must check YES or N/A, as applicable, for items 1, 2, and 3 below.

B. If no exemption from these Regulation requirements applies, Contractor must provide to the Agency: (1) a valid Certificate of Reported Compliance for its fleet, and (2) valid Certificates of Reported Compliance for fleets of any subcontractors.

C. If an exemption from these Regulation requirements does apply, Contractor must provide the Agency with detailed documentation identifying the exemption and supporting the applicability of the exemption.

D. If Contractor asserts that the emergency operations exemption applies, Contractor must provide: (1) a description of the emergency, (2) the address or description of the specific location where Contractor performed work to address the emergency, (3) the dates on which the emergency work was performed, and (4) an attestation by the Contractor that the vehicles operated on the project were only used to carry out emergency work.

Please respond YES or N/A for each item below.	**YES**	**N/A**	
1. Contractor has provided the Agency with a copy of a valid Certificate of Reported Compliance for Contractor's own fleet.	☐	☐	(check N/A if exemption applies)
2. Contractor has provided the Agency with a copy of a valid Certificate of Reported Compliance for any subcontractors' fleet.	☐	☐	(check N/A if exemption applies or there are no subcontractors)
3. Contractor has provided the Agency with documentation supporting a claimed exemption to the Off-Road Regulation.	☐	☐	(check N/A if no exemption applies)

SCHEDULE OF BID PRICES
Recycled Water Project

Basis of Bid

A. For the determination of the apparent low Bidder, the total amount for each Bid shall be the sum of the Base Bid Schedules A through E. The low Bidder shall be that which results in the lowest total amount for all the Work in Base Bid Schedules A through E.
B. Owner may award all Base Bid Schedules A through E.
C. Owner may award some or all of Additive Bid Schedules F through H.

Base Bid – Schedule A: Recycled Water Expansion

Item	Description	Units	Estimated Quantity	Bid Price per Unit	Amount
A-1	Mobilization and Demobilization (5% of Construction Subtotal)	LS	1		
A-2	Water Pollution Control (1% of Construction Subtotal)	LS	1		
A-3	Temporary Traffic Control (3% of Construction Subtotal)	LS	1		
A-4	Trench Sheeting, Shoring and Bracing (Recycled Water, 3% of RW Pipe)	LS	1		
A-5	8-Inch Open-Trench RW Main, AC Pavement Surface Restoration	LF	3,330		
A-6	2-Inch Open-Trench RW Service, AC Pavement Surface Restoration	LF	140		
A-7	1-Inch Open-Trench RW Service, AC Pavement Surface Restoration	LF	100		
A-8	2-Inch Meter and Backflow Assembly	EA	5		
A-9	1-Inch Meter and Backflow Assembly	EA	2		
A-10	8-Inch Gate Valve	EA	8		
A-11	Permanent Blowoff	EA	3		
A-12	1-Inch Air Release/Vacuum Valve	EA	2		
A-13	Fire Hydrant (elbow, thrust block, riser pipe, break-off CV/flange, hydrant)	EA	5		

Item	Description	Units	Estimated Quantity	Bid Price per Unit	Amount
A-14	Ford House Public Restrooms Plumbing Retrofit	LS	1		
A-15	Utility Conflict Resolution	FA	10	$6,000.00	$60,000.00
TOTAL BASE BID SCHEDULE A AMOUNT $_____ (in words)					$_____ (in figures)

Base Bid – Schedule B: MCCSD Property Irrigation System

Item	Description	Units	Estimated Quantity	Bid Price per Unit	Amount
B-1	MCCSD Property Irrigation System	LS	1		
B-2	MCCSD Property Irrigation Controller	LS	1		
B-3	MCCSD Property PG&E Service	LS	1		
TOTAL BASE BID SCHEDULE B AMOUNT $_____ (in words)					$_____ (in figures)

Base Bid – Schedule C: Hillcrest Cemetery Irrigation System

Item	Description	Units	Estimated Quantity	Bid Price per Unit	Amount
C-1	Hillcrest Irrigation System	LS	1		
TOTAL BASE BID SCHEDULE C AMOUNT $_____ (in words)					$_____ (in figures)

Base Bid – Schedule D: Heider Field Irrigation System

Item	Description	Units	Estimated Quantity	Bid Price per Unit	Amount
D-1	Heider Field Irrigation System	LS	1		
D-2	Heider Field Irrigation Controller	LS	1		
D-3	Heider Field PG&E Service	LS	1		
TOTAL BASE BID SCHEDULE D AMOUNT $_____ (in words)					$_____ (in figures)

Base Bid – Schedule E: Evergreen Cemetery Irrigation System

Item	Description	Units	Estimated Quantity	Bid Price per Unit	Amount
E-1	Evergreen Cemetery Irrigation System	LS	1		
TOTAL BASE BID SCHEDULE E AMOUNT $_____ (in words)					$_____ (in figures)

BASE BID SUMMARY

TOTAL BASE BID SCHEDULE A AMOUNT $_____ (in words)	 $_____ (in figures)
TOTAL BASE BID SCHEDULE B AMOUNT $_____ (in words)	 $_____ (in figures)
TOTAL BASE BID SCHEDULE C AMOUNT $_____ (in words)	 $_____ (in figures)
TOTAL BASE BID SCHEDULE D AMOUNT $_____ (in words)	 $_____ (in figures)
TOTAL BASE BID SCHEDULE E AMOUNT $_____ (in words)	 $_____ (in figures)
TOTAL BASE BID AMOUNT **$_____** **(in words)**	 **$_____** **(in figures)**

Additive Bid – Schedule F: Evergreen Street Sewer Main Replacement

Item	Description	Units	Estimated Quantity	Bid Price per Unit	Amount
F-1	Trench Sheeting, Shoring and Bracing	LS	1		
F-2	Open-Trench 6-inch Sewer Main	LF	285		
F-3	48-Inch Sewer Manhole	EA	2		
F-4	Connect Sewer Lateral	EA	7		
F-5	Provide 2-Way Cleanout	EA	5		
TOTAL BASE BID SCHEDULE F AMOUNT $_____ (in words)					$_____ (in figures)

Additive Bid – Schedule G: Main Street Sewer Lift Station Improvements

Item	Description	Units	Estimated Quantity	Bid Price per Unit	Amount
G-1	Main Street Sewer Lift Station Improvements	LS	1		
TOTAL BASE BID SCHEDULE G AMOUNT $_____ (in words)					$_____ (in figures)

Additive Bid – Schedule H: Main Street Recycled Water Extension

Item	Description	Units	Estimated Quantity	Bid Price per Unit	Amount
H-1	8-Inch Open-Trench RW Main Extension, AC Pavement Surface Restoration	LF	150		
TOTAL ALTERNATE BID SCHEDULE H AMOUNT $_____ (in words)					$_____ (in figures)

CONDITIONS FOR SCHEDULE OF BID PRICES

In case of discrepancy between prices and totals, the unit prices will prevail.

It is understood and agreed that the quantities of work under each item are approximate only, being given for a basis of comparison of proposals, and the right is reserved to the District to increase or decrease the amount of work under any item as may be required, in accordance with provisions set forth in the specifications for this project.

It is further understood and agreed that the total amount of money set forth for each item of work or as the total amount bid for the project does not constitute an agreement to pay a lump sum for the work unless it specifically so states.

Bidder acknowledges receipt of the following addenda:

_____.

Bidder has reflected any changes in the addenda in this Proposal.

NON-COLLUSION AFFIDAVIT (Public Contract Code sec. 7106)

Recycled Water Expansion Project

To be Executed by Bidder and Submitted with Bid

State of California
County of _____

The undersigned declares:

I am the _____[title] of _____ [bidding entity] , the party making the foregoing bid.

The bid is not made in the interest of, or on behalf of, any undisclosed person, partnership, company, association, organization, or corporation. The bid is genuine and not collusive or sham. The bidder has not directly or indirectly induced or solicited any other bidder to put in a false or sham bid. The bidder has not directly or indirectly colluded, conspired, connived, or agreed with any bidder or anyone else to put in a sham bid, or to refrain from bidding. The bidder has not in any manner, directly or indirectly, sought by agreement, communication, or conference with anyone to fix the bid price of the bidder or any other bidder, or to fix any overhead, profit, or cost element of the bid price, or of that of any other bidder. All statements contained in the bid are true. The bidder has not, directly or indirectly, submitted his or her bid price or any breakdown thereof, or the contents thereof, or divulged information or data relative thereto, to any corporation, partnership, company, association, organization, bid depository, or to any member or agent thereof, to effectuate a collusive or sham bid, and has not paid, and will not pay, any person or entity for such purpose.

Any person executing this declaration on behalf of a bidder that is a corporation, partnership, joint venture, limited liability company, limited liability partnership, or any other entity, hereby represents that they have full power to execute, and does execute, this declaration on behalf of the bidder.

I declare under penalty of perjury under the laws of the State of California that the foregoing is true and correct and that this declaration is executed on _____ [date], at _____ [city], _____ [state].

_____
Signature

_____
Name

_____
Title and Company

DESIGNATION OF SUBCONTRACTORS

Recycled Water Expansion Project

The undersigned is required to fill in the following blanks in accordance with the provisions of California Public Contract Code section 4104.

Sub-Contractor Name	License Number	DIR Registration Number	Location of the Place of Business	Specific Description of Subcontract Work	$ Amount of the Sub-Contractor Work

Subcontractors listed herein must be properly licensed under the laws of the State of California for the type of work which they are to perform. Do not list alternate subcontractors for the same work. The undersigned agrees to furnish proof that all contractors and subcontractors performing any work related to this improvement are complying with all the requirements of Social Security Legislation, both State and Federal, and also agrees to conform with the provisions of sections 4100 to 4113, inclusive, of the Public Contract Code, as amended, concerning subcontractors and subcontracts.

CONTRACTOR LICENSE INFORMATION

Recycled Water Expansion Project

The bidder acknowledges that the appropriate license is required for performance of this Work.

The bidder holds the following California Contractors License(s):

1. License No. _____, Class _____, Expiration Date _____
2. License No. _____, Class _____, Expiration Date _____
3. License No. _____, Class _____, Expiration Date _____
4. License No. _____, Class _____, Expiration Date _____
5. License No. _____, Class _____, Expiration Date _____

Bidder's Taxpayer Identification No.

_____

BIDDER'S RESPONSIBILITY STATEMENT

Recycled Water Expansion Project

1. SCOPE OF THIS STATEMENT

To allow the District to evaluate the Bidder's responsibility, the Bidder shall provide the following information as a part of its Bid. The District shall consider the information contained in this Statement as personal and proprietary to the Bidder, and the District shall use the information for the sole purpose of determining the Bidder's responsibility. Unless otherwise compelled by a court order, the District shall not consider this Statement to be a public record; provided, however, that the Bidder shall indemnify, defend, and hold the District harmless from any claim or litigation related to the District's classification of this document as exempt from disclosure under the Public Records Act. If additional pages are required to respond to any of the questions set forth in this Statement, the Bidder shall describe and list the additional pages in Section 7, below.

2. EXPERIENCE

a. How many years has the Bidder been performing work as a contractor under the present business name?

_____ years.

b. Prospective bidders shall demonstrate a minimum of 5 years of experience in constructing projects of a similar size and nature.

c. If any of the experience listed in this document refers to work performed under a different name, list the different business names, and describe the relationship to the present business name on a separate page (list the additional pages in Section 7 below).

3. COMPLETED WORK / REFERENCES

Provide the requested information set forth below for at least two (2) most recent projects of similar size and scope completed during the past three (3) years.

a. Project Name: _____

Project Description: _____

_____

Contract Amount: _____

Date Completed: _____

Contact Person: _____

Contact Person's Phone: _____

b. Project Name: _____

Project Description: _____

_____

Contract Amount: _____

Date Completed: _____

Contact Person: _____

Contact Person's Phone: _____

4. CLAIMS HISTORY

a. Has any claim (whether mediated, arbitrated, or litigated) been made against your company in the past five years? _____

b. Has your company made any claim (whether mediated, arbitrated, or litigated) against any Public Agency or claim in the past five years? _____

c. If you answered "yes" to subsections 4.a. or 4.b. above, describe the claim(s) using the format below: (use additional sheets if necessary).

Project Name: _____

Claim Amount: _____

Other Party Contact: _____

Name and Phone: _____
Describe the claim(s) on a separate sheet (see Section 8, below).

5. CONTRACT TERMINATION

Has your company ever been terminated by a public agency or client, or rejected from bidding on a public works project in the last five (5) years? _____. If yes, provide an explanation below:

Project Name: _____

Agency/Client Contact
Name and Phone: _____

Date of Termination/Rejection: _____

Explanation: _____

_____

_____

If more than one (1), describe on additional sheet (see Section 7 below).

6. COMPLETION BY SURETY

Has your company every failed to satisfactorily complete a construction contract, or has a surety ever completed any portion of a construction contract of your company within the last five (5) years? _____. If yes, provide an explanation below:

Project Name: _____

Surety Contact
Name and Phone: _____

Date of Surety Took Over: _____

Explanation: _____

_____

_____

If more than one (1), describe on additional sheet (see Section 7, below).

7. ADDITIONAL PAGES

The Bidder declares that the pages listed in this Subsection were added and included with these Bid Documents to accurately respond to the Bidding Requirements.

_____ (List Pages)

8. PENALTY OF PERJURY

Bidder hereby declares and certifies under penalty of perjury that the information contained herein is true, correct, and complete.

IN WITNESS WHEREOF, the undersigned represent and warrant that they have the right, power, legal capacity and authority to sign this document on behalf of the Bidder, and have caused this document to be executed by setting hereto their names, titles, and signatures.

BIDDER: _____
Signature(s)

DATE: _____

_____
(Name and Title of Signatories)

_____
(Legal Name of Bidder)

_____
(Address)

_____
(Phone Number)

BIDDER'S SIGNATURE PAGE

Recycled Water Expansion Project

The undersigned hereby declares that the cost of all necessary items for completion of this project are included in the unit prices quoted, all incidentals have been taken into consideration even though said incidentals are not specifically listed in the specifications or shown on the plans. The undersigned is likewise aware of the fact that distances, quantities, and other estimated figures appearing on the plans or mentioned in the specifications or on the Proposal are only approximate and declares that the unit prices shown above for the various items of work are based on distances and quantities calculated as the result of actual measures performed at the site project.

Respectfully Submitted, Date: _____

Firm Name: _____

Signature: _____

Address: _____

_____

Business Phone: _____

Contractor's License No. _____ Class _____ Expiration Date: _____

Bidder is a* _____ If a partnership, names of partners. If a corporation, names of President or Vice President, and the Secretary or Asst. Secretary.

Name **Address**

_____ _____

_____ _____

_____ _____

I (we) hereby state and declare, under the penalty of perjury under the laws of California, that the representatives made herein are true and correct.

Executed _____ at _____ California.
Date Location

* By: _____ * By: _____

Title: _____ Title: _____

*Please state whether the bidder is an individual, a partnership, a corporation, or an individual doing business under a fictitious name. If the bidder is a corporation, affix corporate seal.

NOTE: Contractor signatures must be notarized. Attach appropriate notary acknowledgements.

BIDDER'S BOND

Recycled Water Expansion Project

KNOW ALL BY THESE PRESENTS: That

_____

As Principal (herein called "Principal") and

_____

As Surety (herein called "Surety")

are held and firmly bound unto the Mendocino City Community Services District, a California Special District (herein called "Obligee"), in just and full sum of _____ **($)** lawful money of the United States of America, (said sum being equal to 10% of the estimated total amount of the bid) of Principal for the herein described work of improvement, for the payment of which, well and truly to be made, we hereby bind ourselves and our, and each of our, heirs, executors, administrators, successors, and assigns, jointly and severally, firmly by these presents.

THE CONDITION OF THE ABOVE OBLIGATION IS SUCH, That

WHEREAS, Principal who is bidding, or is about to bid, for the following described work of improvement, all in accordance with the Notice Inviting Bids, Proposal, Plans, Specifications, and Standard Contractual Requirements of Obligee therefore.

NOW, THEREFORE, if Obligee shall make an award to Principal for said work of improvement according to the terms of such bid, and Principal shall duly execute, or cause to be executed, and delivered to Obligee the Contract, bonds, and evidence of insurance coverage as, and within the time required by the Standard Contractual Requirements, then this obligation shall be null and void; otherwise, it shall remain in full force and effect.

No extension of time granted to the Principal and no change or alteration in any of the terms of the bid or the bid requirements, whether made after notice or note, shall release or otherwise affect the obligations of the Surety hereunder, and the Surety waives notice of any such extension, change, or alteration. The Surety, by the execution of this bond, represents and warrants that this bond has also been duly executed by the Principal with proper authority, and the Surety hereby waives any defense which it might have by reason of any failure of the Principal to execute this bond.

In the event suit is brought upon this bond by the Obligee and judgment is recovered by the Obligee, court costs, including reasonable attorney's fees, shall be an additional obligation of this bond for which Principal and Surety shall be liable.

Signed and Sealed this _____ day of _____ 20 .

Contractor as Principal	Surety
(Corp. Seal)	(Corp. Seal)
Company Name	Company Name
Signature	Signature
Print Name	Print Name
Title	Title
Street Address	Street Address
District, State, Zip Code	District, State, Zip Code

Note: Signatures of those executing for Surety must be properly acknowledged. The bond must be accompanied by a power of attorney from the Surety authorizing its agent to bind it to this bond.